RAMSOND

Version : 1.0

SERVICE MANUAL

SPLIT AIR AC

INVERTER SERIES

MODEL:

AS-09UW4SVDTG9	AS-12UW4SVETG9	AS-18UW4SXATG
AS-22UW4SBBTG	AS-12UR5SXXQA	AS-12TR5SVETG1
AS-12UR5SVETG1	AS-18TR5SFATG	AS-18UR5SFATG
AS-22TR5SFBTG	AS-22UR5SFBTG	AS-12TR5SYDDB
AS-09TR3SVDTG	AS-09UR3SVDTG	AS-12TR3SVETG
AS-12UR3SVETG	AS-18TR3SXATG	AS-18UR3SXATG
AS-24TR3SBBTG	AS-24UR3SBBTG	AS-09TR3SVETG
AS-09UR3SVETG	AS-12TR3SXETG	AS-12UR3SXETG
AS-18TR3SBBTG	AS-18UR3SBBTG	AS-24TR3SDBTG
AS-24UR3SDBTG	AS-30UR3SDKVQ	AS-36UR3SDKVQ
AS-12UR3SVEDF	AS-18UR3SXADF	AS-24UR3SBBDF

Contents

1. Safety Considerations 4

2. Product Specifications 6

3. Product Picture and Drawing 20

3-1. Product Pictures 20

3-2. Product dimensions 22

4. Installation Instruction 25

4-1. Installation Place and Condition 25

4-2. Electric Wiring Diagram 27

4-3. Refrigerant Flow System 35

4-4. Air Purging and Leakage Test 36

4-5. Test Running 37

5. Function Operation 38

5-1. Operation Range (cooling and heating) 38

5-2. Remote Controller Operation & Function 38

5-3. Special Function Fnstruction 40

6. Electrical Characteristics 47

6-1. Print Circuit Board (Indoor & Outdoor) 47

6-2. Fan Motor 57

6-3. Temperature Sensor 59

6-4. Compressor 62

6-5. Electric Reactor 62

7.Trouble Shooting 63

7-1. Error Code Table 63

7-2. Test the jumper terminals 71

7-3. Trouble Diagnosis of Protection 71

7-4. Trouble Diagnosis of Compressor 73

7-5. Trouble Diagnosis of Electric Filter Board 73

7-6. Trouble Diagnosis of Electric Communication 73

1. Safety Considerations

IMPORTANT!
Please Read Before Starting

This air conditioning system meets strict safety and operating standards. As the installer or service person, it is an important part of your job to install or service the system, so it operates safely and efficiently.

For safe installation and trouble-free operation, you must:

- Carefully read this instruction booklet before beginning.
- Follow each installation or repair step exactly as shown.
- Observe all local, state, and national electrical codes.
- Pay close attention to all warning and caution notices given in this manual.

This symbol refers to a hazard or unsafe practice which can result in severe personal injury or death.

This symbol refers to a hazard or unsafe practice which can result in personal injury or product or property damage.

If Necessary, Get Help

These instructions are all you need for most installation sites and maintenance conditions. If you require help for a special problem, contact our sales/service outlet or your certified dealer for additional instructions.

In Case of Improper Installation

The manufacturer shall in no way be responsible for improper installation or maintenance service, including failure to follow the instructions in this document.

SPECIAL PRECAUTIONS

When Wiring WARNING

ELECTRICAL SHOCK CAN CAUSE SEVERE PERSONAL INJURY OR DEATH. ONLY A QUALIFIED, EXPERIENCED ELECTRICIAN SHOULD ATTEMPT TO WIRE THIS SYSTEM.

- Do not supply power to the unit until all wiring and tubing are completed or reconnected and checked.
- Highly dangerous electrical voltages are used in this system. Carefully refer to the wiring diagram and these instructions when wiring. Improper connections and inadequate grounding can cause accidental injury or death.
- Ground the unit following local electrical codes.
- Connect all wiring tightly. Loose wiring may cause overheating at connection points and a possible

fire hazard.

When Transporting

Be careful when picking up and moving the indoor and outdoor units. Get a partner to help, and bend your knees when lifting to reduce strain on your back. Sharp edges or thin aluminum fins on the air conditioner can cut your fingers.

When Installing

● **In a Ceiling or Wall**

Make sure the ceiling/wall is strong enough to hold the unit's weight. It may be necessary to construct a strong wood or metal frame to provide added support.

● **In a Room**

Properly insulate any tubing run inside a room to prevent "sweating" that can cause dripping and water damage to walls and floors.

● **In Moist or Uneven Locations**

Use a raised concrete pad or concrete blocks to provide a solid, level foundation for the outdoor unit. This prevents water damage and abnormal vibration.

● **In an Area with High Winds**

Securely anchor the outdoor unit down with bolts and a metal frame. Provide a suitable air baffle.

● **In a Snowy Area (for Heat Pump-type Systems)**

Install the outdoor unit on a raised platform that is higher than drifting snow. Provide snow vents.

When Connecting Refrigerant Tubing

△ Use the flare method for connecting tubing.

△ Apply refrigerant lubricant to the matching surfaces of the flare and union tubes before connecting them, then tighten the nut with a torque wrench for a leak free connection.

△ Check carefully for leaks before starting the test run.

When Servicing

△ Turn the power OFF at the main power box (mains) before opening the unit to check or repair electrical parts and wiring.

△ Keep your fingers and clothing away from any moving parts.

△ Clean up the site after you finish, remembering to check that no metal scraps or bits of wiring have been left inside the unit being serviced.

Others

△ Ventilate any enclosed areas when installing or testing the refrigeration system. Escaped refrigerant gas, on contact with fire or heat, can produce dangerously toxic gas.

△ Confirm upon completing installation that no refrigerant gas is leaking. If escaped gas comes in contact with a stove, gas water heater, electric room heater or other heat source, it can produce dangerously toxic gas.

NOTE:

The figure、size and parameter of the product may not be identical with the service manual, please take the actual product as the standard.

2. Product Specifications

Model No.		AS-12TR5SYDDB	AS-12UR4SVETG9	AS-12UR3SXETG	AS-12UR5SXXQA
Type		T1, H/P, INVERTER	T1, H/P, INVERTER	T1, H/P, INVERTER	T1, H/P, INVERTER
Ratings					
Cooling Capacity	Btu/h	12000	3500	3517	12000
Heating Capacity	Btu/h	/	3500	3810	12800
Rated Input-Cooling	W	1190	1090	960	860
Rated Input-Heating	W	/	1026	1110	930
Moisture Removal	L/h	1.2	1.2	1.2	1.2
Air Circulation	High m3/h	580	620	620	620
	Mid m3/h	510	510	/	/
	Low m3/h	420	420	/	/
EER for Cooling	W/W	2.95/16	3.21	3.66	4.09
COP for Heating	W/W	/	3.41	3.43	4.03
Energy Class	Cooling	/	/	SEER20	SEER25
Energy Class	Heatling	/	/	HSPF9.5	HSPF11
Refrigerant		R410A	R410A	R410A	R410A
Refrigerant charge volume （5M）	g	790	930	1160	1100
Additional ref. Volume	g	20	20	20	20
Indoor Unit Noise Level	High(dB (A))	39	40	39	40
	Mid(dB (A))	36	36	32	/
	Low(dB (A))	32	33	29	/
Outdoor Unit Noise Level	dB (A)	53	54	53	50
Power Supply					
Voltage, Frequency, Phase	V	220-240V~,50Hz,1P	220-240V~,50Hz,1P	230/208V~,60Hz,1P	230V~,60Hz,1P
Rated Current	Cooling (A)	5.3	5.0	4.3	3.8
	Heating (A)	7.5	4.8	5.0	4.2
LRA	A	/	/	/	/
System pressures in cooling rated conditions					
Max suction pressure	MPa	1.6	1.6	1.6	1.6
Max discharge pressure	MPa	4.15	4.15	4.15	4.15
System					
Compressor					
Compressor type		Rotary	Rotary	Rotary	Rotary
Compressor Model No.		39A26MZJ-5JKE	ASN108D32UFZ	ASN108D32UFZ	ASN108D32UFZ
Compressor MFG		RECHI	GMCC	GMCC	GMCC
Connecting Pipe Diameter					
Liquid Pipe	inch	1/4	1/4	1/4	1/4
Gas Pipe	inch	3/8	3/8	3/8	3/8
Features					
Display on Front Panel		LED	LED	LED	LED

LCD Wireless Remote Controller		Yes	Yes	Yes	Yes
Removable and washable Panel		Yes	Yes	Yes	Yes
Washable PP Filter		Yes	Yes	Yes	Yes
24 Hours Timer		Yes	Yes	Yes	Yes
3 Speed and Auto Indoor Fan Control		Yes	Yes	Yes	Yes
Vertical Auto Swing Louver		Yes	Yes	Yes	Yes
Manual Adjustable Horizontal Swing Louver		Yes	Yes	Yes	Yes
Sleep Operation		Yes	Yes	Yes	Yes
Smart Function		Yes	Yes	Yes	Yes
Super Function		Yes	Yes	Yes	Yes
Auto Restart		Yes	Yes	Yes	Yes
Dimmer		Yes	Yes	Yes	Yes
Other					
Net Dimensions WxHxD (mm)	Indoor Unit	764×270×219	950X272X207	950×272×207	963×319×226
	Outdoor Unit	660x240x483	715×240×482	810×585×280	810×585×280
Net Weight (Kg)	Indoor Unit	8	9	9	14
	Outdoor Unit	25	28	33	33
Packing Dimensions WxHxD (mm)	Indoor Unit	800*335*265	1000×335×260	1000×335×260	1090×430×340
	Outdoor Unit	780×315×530	830×315×530	940×630×385	940×630×385
Gross Weight (Kg)	Indoor Unit	9.5	11	11	17
	Outdoor Unit	27	30	36	36

Model No.		AS-12UR3SVETG AS-12UR3SVEDF	AS-12TR3SVETG	AS-12UR5SVETG1	AS-12TR5SVETG1
Type		T1, H/P, INVERTER	T1, H/P, INVERTER	T1, H/P, INVERTER	T1, H/P, INVERTER
Ratings					
Cooling Capacity	Btu/h	12000	12000	3517	3517
Heating Capacity	Btu/h	13000	/	3810	/
Rated Input-Cooling	W	1120	1095	1120	1095
Rated Input-Heating	W	1110	/	1110	/
Moisture Removal	L/h	1.2	1.2	1.2	1.2
Air Circulation	High m3/h	620	620	620	620
	Mid m3/h	510	510	510	510
	Low m3/h	420	420	420	420
EER for Cooling	W/W	3.14	3.21	3.14	3.21
COP for Heating	W/W	3.43	/	3.43	/
Energy Class	Cooling	SEER16.4	SEER16.4	SEER16.4	SEER16.4
Energy Class	Heatling	HSPF8.8	/	HSPF8.8	/
Refrigerant		R410A	R410A	R410A	R410A

Refrigerant charge volume （5M）	g	1000	930	1000	930
Additional ref. Volume	g	20	20	20	20
Indoor Unit Noise Level	High(dB (A))	40	40	40	40
	Mid(dB (A))	36	36	36	36
	Low(dB (A))	33	33	33	33
Outdoor Unit Noise Level	dB (A)	54	54	54	54
Power Supply					
Voltage, Frequency, Phase	V	208/230V~,60Hz,1P	208/230V~,60Hz,1P	220-240V~,60Hz,1P	220-240V~,60Hz,1P
Rated Current	Cooling (A)	5.0	4.9	5.0	4.9
	Heating (A)	5.0	/	5.0	/
LRA	A	/	/	/	/
System pressures in cooling rated conditions					
Max suction pressure	MPa	240	240	1.6	1.6
Max discharge pressure	MPa	550	550	4.15	4.15
System					
Compressor					
Compressor type		Rotary	Rotary	Rotary	Rotary
Compressor Model No.		ASN108D32UFZ	ASN108D32UFZ	ASN108D32UFZ	ASN108D32UFZ
Compressor MFG		GMCC	GMCC	GMCC	GMCC
Connecting Pipe Diameter					
Liquid Pipe	inch	1/4	1/4	1/4	1/4
Gas Pipe	inch	3/8	3/8	3/8	3/8
Features					
Display on Front Panel		LED	LED	LED	LED
LCD Wireless Remote Controller		Yes	Yes	Yes	Yes
Removable and washable Panel		Yes	Yes	Yes	Yes
Washable PP Filter		Yes	Yes	Yes	Yes
24 Hours Timer		Yes	Yes	Yes	Yes
3 Speed and Auto Indoor Fan Control		Yes	Yes	Yes	Yes
Vertical Auto Swing Louver		Yes	Yes	Yes	Yes
Manual Adjustable Horizontal Swing Louver		Yes	Yes	Yes	Yes
Sleep Operation		Yes	Yes	Yes	Yes
Smart Function		Yes	Yes	Yes	Yes
Super Function		Yes	Yes	Yes	Yes
Auto Restart		Yes	Yes	Yes	Yes
Dimmer		Yes	Yes	Yes	Yes
Other					
Net Dimensions WxHxD (mm)	Indoor Unit	950X272X207	950X272X207	950X272X207	950X272X207
	Outdoor Unit	715×240×482	715×240×482	715×240×482	715×240×482
Net Weight (Kg)	Indoor	9	9	9	9

	Unit				
	Outdoor Unit	27	26.5	27	26.5
Packing Dimensions WxHxD (mm)	Indoor Unit	1000×335×260	1000×335×260	1000×335×260	1000×335×260
	Outdoor Unit	830×315×530	830×315×530	830×315×530	830×315×530
Gross Weight (Kg)	Indoor Unit	11	11	11	11
	Outdoor Unit	29.5	29	29.5	29

Model No.		AS-09UR3SVDTG	AS-09TR3SVDTG	AS-09UR4SVDTG 9	AS-12TR3SXETG
Type		T1, H/P, INVERTER	T1, C/O, INVERTER	T1, H/P, INVERTER	T1, H/P, INVERTER
Ratings					
Cooling Capacity	W	2637	2637	2600	12000
Heating Capacity	W	2930	/	2600	/
Rated Input-Cooling	W	825	825	810	920
Rated Input-Heating	W	880	/	760	/
Moisture Removal	L/h	0.9	0.9	0.9	1.2
Air Circulation	High m3/h	550	550	550	620
	Mid m3/h	/	/	/	/
	Low m3/h	/	/	/	/
EER for Cooling	W/W			3.21	13.04
COP for Heating	W/W			3.42	/
Energy Class	Cooling	3.20(SEER16)	3.20(SEER16)	/	SEER20
Energy Class	Heatling	3.33(HSPF8.5)	/	/	/
Refrigerant		R410A	R410A	R410A	R410A
Refrigerant charge volume （5M）	g	830	650	610	1110
Additional ref. Volume	g	20	20	20	20
Indoor Unit Noise Level	Super(dB (A))	39	39	39	39
	High(dB (A))	36	36	/	/
	Mid(dB (A))	33	33	/	/
	Low(dB (A))				
	Mid-Low(dB (A))				
	Low(dB (A))				
	Quirt(dB (A))				
Outdoor Unit Noise Level	dB (A)	54	53	54	53
Power Supply					
Voltage, Frequency, Phase	V	208/230V~,60Hz,1P	208/230V~,60Hz,1P	220-240V~,50Hz,1P	208-230V~,60Hz,1P
Rated Current	Cooling (A)	3.7	3.7	3.7	4.1
	Heating (A)	4	/	3.5	/
LRA	A	/	/	/	/

System pressures in cooling rated conditions					
Max suction pressure	MPa	1.66	1.66	1.6	1.6
Max discharge pressure	MPa	3.79	3.79	4.15	4.15
System					
Compressor					
Compressor type		Rotary	Rotary	Rotary	Hermetic Rotary DC Inverter Compressor
Compressor Model No.		ASK89D53UEZ1	ASK89D53UEZ1	ASK89D53UEZ1	ASN108D32UFZ
Compressor MFG		GMCC	GMCC	GMCC	GMCC
Connecting Pipe Diameter					
Liquid Pipe	inch	1/4	1/4	1/4	1/4
Gas Pipe	inch	3/8	3/8	3/8	3/8
Features					
Display on Front Panel		LED	LED	LED	LED
LCD Wireless Remote Controller		Yes	Yes	Yes	Yes
Removable and washable Panel		Yes	Yes	Yes	Yes
Washable PP Filter		Yes	Yes	Yes	Yes
24 Hours Timer		Yes	Yes	Yes	Yes
3 Speed and Auto Indoor Fan Control		Yes	Yes	Yes	Yes
Vertical Auto Swing Louver		Yes	Yes	Yes	Yes
Manual Adjustable Horizontal Swing Louver		Yes	Yes	Yes	Yes
Sleep Operation		Yes	Yes	Yes	Yes
Smart Function		Yes	Yes	Yes	Yes
Super Function		Yes	Yes	Yes	Yes
Auto Restart		Yes	Yes	Yes	Yes
Dimmer		Yes	Yes	Yes	Yes
Other					
Net Dimensions WxHxD (mm)	Indoor Unit	880×275×207	880×275×207	880×275×207	950*272*207
	Outdoor Unit	715×240×486	715×240×486	715×240×482	810*280*585
Net Weight (Kg)	Indoor Unit	8	8	8.5	9
	Outdoor Unit	25.5	23	24	33
Packing Dimensions WxHxD (mm)	Indoor Unit	930×260×335	930×260×335	930×260×335	1000*335*260
	Outdoor Unit	830×315×530	830×315×530	830×315×530	940*385*630
Gross Weight (Kg)	Indoor Unit	10	10	10	11
	Outdoor Unit	27.5	25	26	36

Model No.		AS-18UW4SXATG	AS-18UR5SFATG	AS-18TR5SFATG	AS-18UR3SBBTG
Type		T1, H/P, INVERTER	T1, H/P, INVERTER	T1, H/P, INVERTER	T1, H/P, INVERTER
Ratings					
Cooling Capacity	W	5300	18000	18000	5275
Heating Capacity	W	5500	21000	/	5569
Rated Input-Cooling	W	1650	1650	1650	1385
Rated Input-Heating	W	1570	2000	/	1595
Moisture Removal	L/h	2	2	2	/

Air Circulation	High m3/h	1000	1000	1000	1100
	Mid m3/h	/	/	/	/
	Low m3/h	/	/	/	/
EER for Cooling	W/W	3.21	16.5	16.5	22.5/13.0
COP for Heating	W/W	3.5	9	/	10.0/11.9
Energy Class	Cooling	A	/	/	/
Energy Class	Heatling	A	/	/	/
Refrigerant		R410A	R410A	R410A	R410A
Refrigerant charge volume （5M）	g	1340	1320	1320	1550
Additional ref. Volume	g	20	20	20	20
Indoor Unit Noise Level	Super(dB (A))	44	45	45	45
	High(dB (A))	42	43	43	41
	Mid(dB (A))	40	41	41	37
	Low(dB (A))	38	39	39	34
	Mid-Low(dB (A))	36	37	37	
	Low(dB (A))	32	34	34	
	Quirt(dB (A))				
Outdoor Unit Noise Level	dB (A)	56	56	56	55
Power Supply					
Voltage, Frequency, Phase	V	220-240V~,50Hz,1P	230V~,60Hz,1P	230V~,60Hz,1P	208-230V~,60Hz,1P
Rated Current	Cooling (A)		7.4	7.4	6.3
	Heating (A)		9	/	7.2
LRA	A		/	/	
System pressures in cooling rated conditions					
Max suction pressure	MPa	1.6	1.6	1.6	1.65
Max discharge pressure	MPa	4.15	4.15	4.15	3.79
System					
Compressor					
Compressor type		Rotary	Rotary	Rotary	Rotary
Compressor Model No.		ATM150D43UFZ	DA150S1C-20FZ	DA150S1C-20FZ	ATM150D43UFZ
Compressor MFG		GMCC	GMCC	GMCC	GMCC
Connecting Pipe Diameter					
Liquid Pipe	inch	1/4	1/4	1/4	1/4
Gas Pipe	inch	1/2	1/2	1/2	1/2
Features					
Display on Front Panel		LED	LED	LED	LED
LCD Wireless Remote Controller		Yes	Yes	Yes	Yes
Removable and washable Panel		Yes	Yes	Yes	Yes
Washable PP Filter		Yes	Yes	Yes	Yes
24 Hours Timer		Yes	Yes	Yes	Yes
3 Speed and Auto Indoor Fan Control		Yes	Yes	Yes	Yes
Vertical Auto Swing Louver		Yes	Yes	Yes	Yes
Manual Adjustable Horizontal Swing Louver		Yes	Yes	Yes	Yes
Sleep Operation		Yes	Yes	Yes	Yes
Smart Function		Yes	Yes	Yes	Yes

Super Function		Yes	Yes	Yes	Yes
Auto Restart		Yes	Yes	Yes	Yes
Dimmer		Yes	Yes	Yes	Yes
Other					
Net Dimensions WxHxD (mm)	Indoor Unit	1050X320X235	1050X320X235	1050X320X235	1219x320x235
	Outdoor Unit	810x585x280	830X287X634	830X287X634	860×650×310
Net Weight (Kg)	Indoor Unit	12.5	12.5	12.5	14.5
	Outdoor Unit	38	39	38	45
Packing Dimensions WxHxD (mm)	Indoor Unit	1118x392x318	1188x392x318	1188x392x318	1315×392×318
	Outdoor Unit	940×385×630	980×385×665	980×385×665	995×720×420
Gross Weight (Kg)	Indoor Unit	15.5	15.5	15.5	17
	Outdoor Unit	41	42	41	49

Model No.		AS-18TR3SBBTG	AS-18TR3SXATG	AS-18UR3SXATG AS-18UR3SXADF	AS-24TR3SDBTG
Type		T1, CL, INVERTER	T1, CO, INVERTER	T1, H/P, INVERTER	T1, CO, Inverter
Ratings					
Cooling Capacity	W	5275	5275	5275	24000Btu/h
Heating Capacity	W	/	/	5862	/
Rated Input-Cooling	W	1385	1700	1700	1845
Rated Input-Heating	W	/	/	2000	/
Moisture Removal	L/h	/	2	2	2.4
Air Circulation	High m3/h	1100	1000	1000	1200
	Mid m3/h	/	/	/	/
	Low m3/h	/	/	/	/
EER for Cooling	W/W	22.5/13.0	3.1	3.1	3.81
COP for Heating	W/W	/	/	2.93	/
Energy Class	Cooling	/	/	/	SEER20
Energy Class	Heatling	/	/	/	/
Refrigerant		R410A	R410A	R410A	R410A
Refrigerant charge volume （5M）	g	1510	1350	1400	1840
Additional ref. Volume	g	20	20	20	30
Indoor Unit Noise Level	Super(dB (A))	45	45	45	49
	High(dB (A))	41	43	43	47
	Mid(dB (A))	37	38	38	45
	Low(dB (A))	34	35	35	42
	Mid-Low(dB (A))				40
	Low(dB (A))				39
	Quirt(dB (A))				36
Outdoor Unit Noise Level	dB (A)	55	54	54	58
Power Supply					
Voltage, Frequency, Phase	V	208-230V~,60Hz,1P	208-230V~,60Hz,1P	208-230V~,60Hz,1P	230V~,60Hz,1P
Rated Current	Cooling (A)	6.3	7.6	7.6	8.3
	Heating (A)	/	/	9	/

LRA	A				/
System pressures in cooling rated conditions					
Max suction pressure	MPa	1.65	1.6	1.6	1.6
Max discharge pressure	MPa	3.79	4.15	4.15	4.15
System					
Compressor					
Compressor type		Rotary	Rotary	Rotary	Hermetic Rotary DC Inverter Compressor
Compressor Model No.		ATM150D43UFZ	ATM150D43UFZ	ATM150D43UFZ	ATF235D22UMT
Compressor MFG		GMCC	GMCC	GMCC	GMCC
Connecting Pipe Diameter					
Liquid Pipe	inch	1/4	1/4	1/4	3/8
Gas Pipe	inch	1/2	1/2	1/2	1/2
Features					
Display on Front Panel		LED	LED	LED	LED
LCD Wireless Remote Controller		Yes	Yes	Yes	Yes
Removable and washable Panel		Yes	Yes	Yes	Yes
Washable PP Filter		Yes	Yes	Yes	Yes
24 Hours Timer		Yes	Yes	Yes	Yes
3 Speed and Auto Indoor Fan Control		Yes	Yes	Yes	Yes
Vertical Auto Swing Louver		Yes	Yes	Yes	Yes
Manual Adjustable Horizontal Swing Louver		Yes	Yes	Yes	Yes
Sleep Operation		Yes	Yes	Yes	Yes
Smart Function		Yes	Yes	Yes	Yes
Super Function		Yes	Yes	Yes	Yes
Auto Restart		Yes	Yes	Yes	Yes
Dimmer		Yes	Yes	Yes	Yes
Other					
Net Dimensions WxHxD (mm)	Indoor Unit	1219x320x235	1050X320X235	1050X320X235	1219×320×235
	Outdoor Unit	860×650×310	810x585x280	810x585x280	885×365×793
Net Weight (Kg)	Indoor Unit	14.5	12.5	12.5	14.5
	Outdoor Unit	44	39	39	54
Packing Dimensions WxHxD (mm)	Indoor Unit	1315×392×318	1118x392x318	1118x392x318	1315×392×318
	Outdoor Unit	995×720×420	940×385×630	940×385×630	1050×500×910
Gross Weight (Kg)	Indoor Unit	17	14.5	14.5	17
	Outdoor Unit	48	42	42	62

Model No.		AS-24UR3SDBTG	AS-30UR3SDKVQ	AS-36UR3SDKVQ
Type		T1, HP, Inverter	T1, H/P, INVERTER	T1, H/P, INVERTER
Ratings				
Cooling Capacity	W	24000Btu/h	30000	33000
Heating Capacity	W	24500Btu/h	31000	33500
Rated Input-Cooling	W	2050	2900	3300
Rated Input-Heating	W	2310	2700	3100
Moisture Removal	L/h	2.8	3.5	3.6

Air Circulation	High m3/h	1200	1800	1800
	Mid m3/h	/	/	/
	Low m3/h	/	/	/
EER for Cooling	W/W	3.42	16.5	16.5
COP for Heating	W/W	3.11	8.5	8.5
Energy Class	Cooling	SEER20	SEER16	SEER16
Energy Class	Heatling	HSPF11.5	SEER16	SEER16
Refrigerant		R410A	R410A	R410A
Refrigerant charge volume （5M）	g	1880	2070	2250
Additional ref. Volume	g	30	30	30
Indoor Unit Noise Level	Super(dB (A))	49	50	50
	High(dB (A))	47	/	/
	Mid(dB (A))	45	/	/
	Low(dB (A))	42		
	Mid-Low(dB (A))	40		
	Low(dB (A))	38		
	Quirt(dB (A))	34		
Outdoor Unit Noise Level	dB (A)	58	60	60
Power Supply				
Voltage, Frequency, Phase	V	230V~,60Hz,1P	208/230V~,60Hz,1P	208/230V~,60Hz,1P
Rated Current	Cooling (A)	9.2	14.8	14.8
	Heating (A)	9.9	13.8	13.8
LRA	A	/		
System pressures in cooling rated conditions				
Max suction pressure	MPa	1.6	1.6	1.6
Max discharge pressure	MPa	4.15	4.15	4.15
System				
Compressor				
Compressor type		Hermetic Rotary DC Inverter Compressor	Rotary	Rotary
Compressor Model No.		ATF235D22UMT	ATL253UDPC9AUL	ATL253UDPC9AUL
Compressor MFG		GMCC	HIGHLY	HIGHLY
Connecting Pipe Diameter				
Liquid Pipe	inch	3/8	3/8	3/8
Gas Pipe	inch	5/8	5/8	5/8
Features				
Display on Front Panel		LED	LED	LED
LCD Wireless Remote Controller		Yes	Yes	Yes
Removable and washable Panel		Yes	Yes	Yes
Washable PP Filter		Yes	Yes	Yes
24 Hours Timer		Yes	Yes	Yes
3 Speed and Auto Indoor Fan Control		Yes	Yes	Yes
Vertical Auto Swing Louver		Yes	Yes	Yes

Manual Adjustable Horizontal Swing Louver		Yes	Yes	Yes
Sleep Operation		Yes	Yes	Yes
Smart Function		Yes	Yes	Yes
Super Function		Yes	Yes	Yes
Auto Restart		Yes	Yes	Yes
Dimmer		Yes	Yes	Yes
Other				
Net Dimensions WxHxD (mm)	Indoor Unit	1219×320×235	1350×364×250	1350×364×250
	Outdoor Unit	885×365×793	884X365X793	884X365X793
Net Weight (Kg)	Indoor Unit	14.5	18	18
	Outdoor Unit	56	58	60
Packing Dimensions WxHxD (mm)	Indoor Unit	1315×392×318	1425×435×325	1425×435×325
	Outdoor Unit	1050×500×910	1050X500X910	1050X500X910
Gross Weight (Kg)	Indoor Unit	17	21.5	21.5
	Outdoor Unit	64	63	65

Model No.		AS-22UW4SBBTG	AS-22TR5SFBTG	AS-22UR5SFBTG	AS-24TR3SBBTG
Type		H/P	co	H/P	co
Ratings					
Cooling Capacity	W	6500	22000Btu/h	22000Btu/h	24000Btu/h
Heating Capacity	W	6600		22000Btu/h	
Input-Cooling	W	1980	2265	2265	2290
Input-Heating	W	1920		1930	
Rated Input-Cooling	W	3100	3100	3100	3100
Rated Input-Heating	W	3400		3400	
Air Circulation	CFM Max	676	676	676	676
EER for Cooling	W/W	3.28	2.85	2.85	3.07
COP for Heating	W/W	3.44		3.34	
Refrigerant		R410A	R410A	R410A	R410A
Refrigerant charge volume	g	1630	1670	1700	1600

Indoor Unit Noise Level	High(dB (A))	48	48	48	48
	Low(dB (A))	38	38	38	38
Outdoor Unit Noise Level	dB (A)	56	58	58	58
Power Supply					
Voltage, Frequency, Phase		220-240V~,50Hz,1P	230V~,60Hz,1P	230V~,60Hz,1P	208,/230V~,60Hz,1P
Current	Cooling (A)	9.2	9.9	9.9	10.5
	Heating (A)	8.9		8.6	
Rated Current	Cooling (A)	14	13.6	13.6	13.6
	Heating (A)	15.4		15	
System					
Compressor type		Rotary	Rotary	Rotary	Rotary
Compressor Model No.		ATF235D22UMT	ATL232SDNC9DU1L	ATL232SDNC9DU1L	ATF235D22UMT
Compressor MFG		GMCC	HIGHLY	HIGHLY	GMCC
Connecting Pipe Diameter					
Liquid Pipe	inch	3/8	3/8	3/8	3/8
Gas Pipe	inch	5/8	5/8	5/8	5/8
Features					
Display on Front Panel		Yes	Yes	Yes	Yes
LCD Wireless Remote Controller		Yes	Yes	Yes	Yes
Removable and washable Panel		Yes	Yes	Yes	Yes
Washable PP Filter		Yes	Yes	Yes	Yes

24 Hours Timer		Yes	Yes	Yes	Yes
3 Speed and Auto Indoor Fan Control		Yes	Yes	Yes	Yes
Vertical Auto Swing Louver		Yes	Yes	Yes	Yes
Manual Adjustable Horizontal Swing Louver		Yes	Yes	Yes	Yes
Sleep Operation		Yes	Yes	Yes	Yes
Smart Function		Yes	Yes	Yes	Yes
Super Function		Yes	Yes	Yes	Yes
Auto Restart		Yes	Yes	Yes	Yes
Other					
Net Dimensions WxHxD (mm)	Indoor Unit	1219X320X235	1219X320X235	1219X320X235	1219X320X235
	Outdoor Unit	860x310x667	832X287X635	832X287X635	860x310x667
Net Weight (Kg)	Indoor Unit	14.5	14.5	14.5	14.5
	Outdoor Unit	49	44	45	48
Packing Dimensions WxHxD (mm)	Indoor Unit	1315×392×318	1315×392×318	1315×392×318	1315×392×318
	Outdoor Unit	995×420×720	980X385X665	980X385X665	995×420×720
Gross Weight (Kg)	Indoor Unit	17	17	17	17
	Outdoor Unit	54	47.5	48.5	52

Model No.		AS-24UR3SBBTG AS-24UR3SBBDF	AS-09UR3SVETG	AS-09TR3SVETG
Type		H/P	H/P	co
Ratings				

Cooling Capacity	W	24000Btu/h	9000Btu/h	9000Btu/h
Heating Capacity	W	24500Btu/h	9500Btu/h	
Input-Cooling	W	2290	670	670
Input-Heating	W	2280	730	
Rated Input-Cooling	W	3100	1400	1400
Rated Input-Heating	W	3400	1600	
Air Circulation	CFM Max	676	341	341
EER for Cooling	W/W	3.07	3.93	3.93
COP for Heating	W/W	3.15	3.81	
Refrigerant		R410A	R410A	R410A
Refrigerant charge volume	g	1630	950	930
Indoor Unit Noise Level	High(dB (A))	48	38	38
	Low(dB (A))	38	26	26
Outdoor Unit Noise Level	dB (A)	58	53	53
Power Supply				
Voltage, Frequency, Phase		208,/230V~,60Hz,1P	208,/230V~,60Hz,1P	208,/230V~,60Hz,1P
Current	Cooling (A)	10.5	3.1	3.1
	Heating (A)	10.4	3.3	
Rated Current	Cooling (A)	13.6	7	7
	Heating (A)	15	7.8	
System				
Compressor type		Rotary	Rotary	Rotary
Compressor Model No.		ATF235D22UMT	ASD088RKQA6JT6	ASD088RKQA6JT6

Compressor MFG		GMCC	HIGHLY	HIGHLY
Connecting Pipe Diameter				
Liquid Pipe	inch	3/8	1/4	1/4
Gas Pipe	inch	5/8	3/8	3/8
Features				
Display on Front Panel		Yes	Yes	Yes
LCD Wireless Remote Controller		Yes	Yes	Yes
Removable and washable Panel		Yes	Yes	Yes
Washable PP Filter		Yes	Yes	Yes
24 Hours Timer		Yes	Yes	Yes
3 Speed and Auto Indoor Fan Control		Yes	Yes	Yes
Vertical Auto Swing Louver		Yes	Yes	Yes
Manual Adjustable Horizontal Swing Louver		Yes	Yes	Yes
Sleep Operation		Yes	Yes	Yes
Smart Function		Yes	Yes	Yes
Super Function		Yes	Yes	Yes
Auto Restart		Yes	Yes	Yes
Other				
Net Dimensions	Indoor Unit	1219X320X235	950×272×207	950×272×207

WxHxD (mm)				
	Outdoor Unit	860x310x667	715×482×240	715×482×240
Net Weight (Kg)	Indoor Unit	14.5	8.5	8.5
	Outdoor Unit	50	27.0	26.0
Packing Dimensions WxHxD (mm)	Indoor Unit	1315×392×318	1000x335x260	1000x335x260
	Outdoor Unit	995×420×720	830×530×315	830×530×315
Gross Weight (Kg)	Indoor Unit	17	11.0	11.0
	Outdoor Unit	54	29.5	28.5

3. Product Picture and Drawing

3-1. Product Picture s

Indoor unit s:

Front Panel	TG
View	
Front Panel	QA
View	
Front Panel	VQ
View	
Front Panel	DB

View	
Front Panel	DF
View	

Out door Unit s:

Unit	V （W1M ）	X （W 1 P）
View	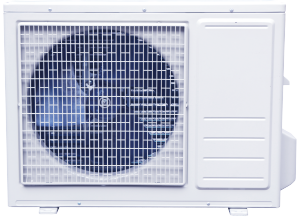	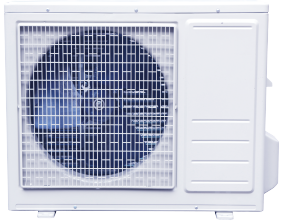
Unit	F （W2M ）	D （W5F ）
View		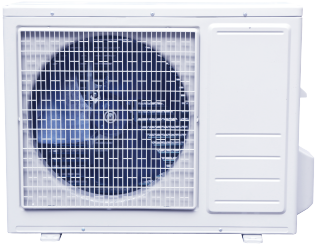
Unit	B （W2 N）	Y （W1R ）
View	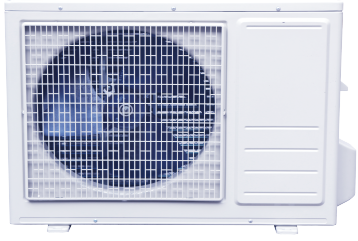	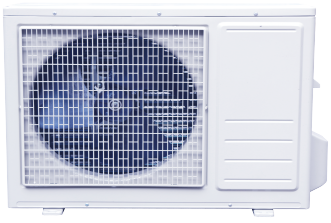

R emote controller :

Model	L 1	J 1
View		

3-2. Product dimension s

I ndoor units:

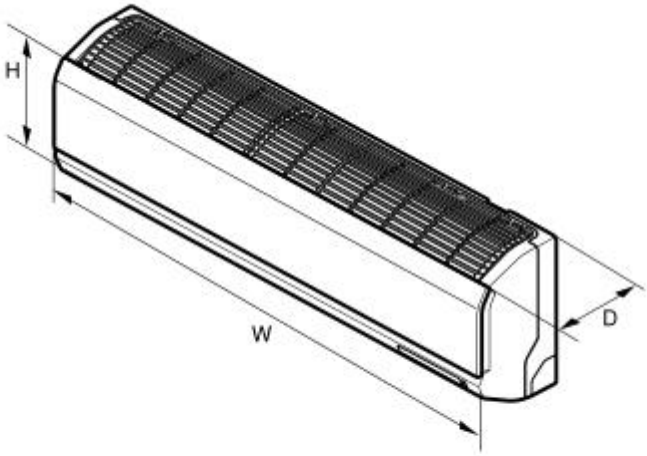

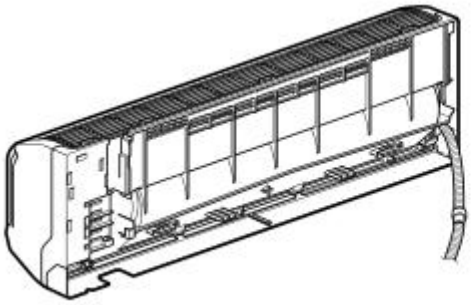

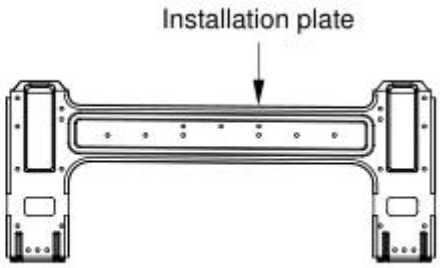

Model	W (mm)	H (mm)	D (mm)
AS-09UW4SVDTG9	880	275	207
AS-12UW4SVETG9	950	272	207
AS-18UW4SXATG	1050	320	235
AS-22UW4SBBTG	1220	320	235
AS-12UR5SXXQA	963	319	226
AS-12TR5SVETG1	950	272	207
AS-12UR5SVETG1	950	272	207
AS-18TR5SFATG	1050	320	235
AS-18UR5SFATG	1050	320	235
AS-22TR5SFBTG	1220	320	235
AS-22UR5SFBTG	1220	320	235
AS-12TR5SYDDB	764	270	219
AS-09TR3SVDTG	880	275	207
AS-09UR3SVDTG	880	275	207
AS-12TR3SVETG	950	272	207
AS-12UR3SVETG	950	272	207
AS-12UR3SVEDF	815	270	210
AS-18TR3SXATG	1050	320	235

AS-18UR3SXATG	1050	320	235
AS-18UR3SXADF	915	315	239
AS-24TR3SBBTG	1220	320	235
AS-24UR3SBBTG	1220	320	235
AS-24UR3SBBDF	1085	315	240
AS-09TR3SVETG	950	272	207
AS-09UR3SVETG	950	272	207
AS-12TR3SXETG	950	272	207
AS-12UR3SXETG	950	272	207
AS-18TR3SBBTG	1220	320	235
AS-18UR3SBBTG	1220	320	235
AS-24TR3SDBTG	1220	320	235
AS-24UR3SDBTG	1220	320	235
AS-30UR3SDKVQ	1350	364	260
AS-36UR3SDKVQ	1350	364	260

Outdoor units:

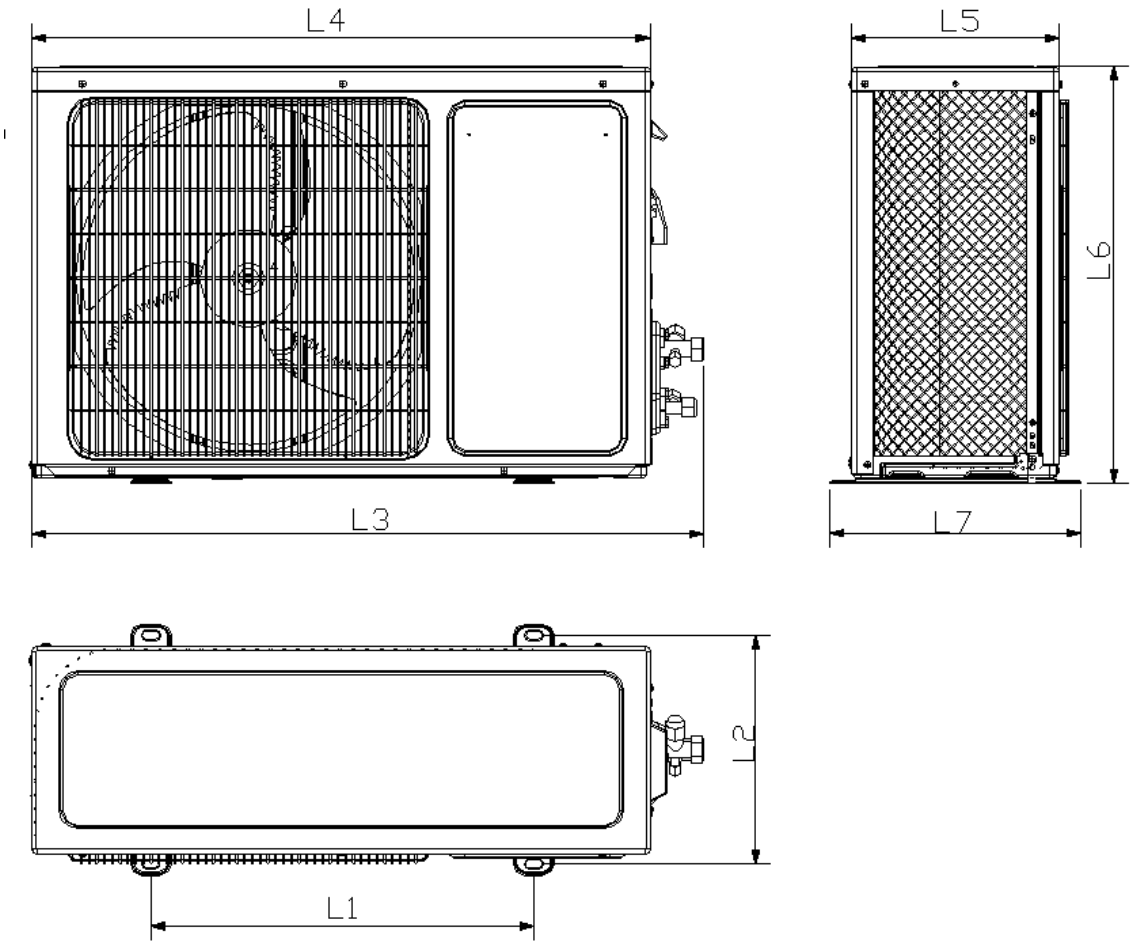

Model	L1 (mm)	L2 (mm)	L3 (mm)	L4 (mm)	L5 (mm)	L6 (mm)	L7 (mm)
AS-09UW4SVDTG9	443	264	776	715	240	486	290
AS-12UW4SVETG9	443	264	776	715	240	486	290

AS-18UW4SXATG	510	310	873	810	280	585	338
AS-22UW4SBBTG	542	341	935	860	310	667	368
AS-12UR5SXXQA	510	310	873	810	280	585	338
AS-12TR5SVETG1	443	264	776	715	240	486	290
AS-12UR5SVETG1	443	264	776	715	240	486	290
AS-18TR5SFATG	565	314	913	832	287	635	350
AS-18UR5SFATG	565	314	913	832	287	635	350
AS-22TR5SFBTG	565	314	913	832	287	635	350
AS-22UR5SFBTG	565	314	913	832	287	635	350
AS-12TR5SYDDB	438	264	722	660	240	493	290
AS-09TR3SVDTG	443	264	776	715	240	486	290
AS-09UR3SVDTG	443	264	776	715	240	486	290
AS-12TR3SVETG	443	264	776	715	240	486	290
AS-12UR3SVETG	443	264	776	715	240	486	290
AS-12UR3SVEDF	443	264	776	715	240	486	290
AS-18TR3SXATG	510	310	873	810	280	585	338
AS-18UR3SXATG	510	310	873	810	280	585	338
AS-18UR3SXADF	510	310	873	810	280	585	338
AS-24TR3SBBTG	542	341	935	860	310	667	368
AS-24UR3SBBTG	542	341	935	860	310	667	368
AS-24UR3SBBDF	542	341	935	860	310	667	368
AS-09TR3SVETG	443	264	776	715	240	486	290
AS-09UR3SVETG	443	264	776	715	240	486	290
AS-12TR3SXETG	510	310	873	810	280	585	338
AS-12UR3SXETG	510	310	873	810	280	585	338
AS-18TR3SBBTG	542	341	935	860	310	667	368
AS-18UR3SBBTG	542	341	935	860	310	667	368
AS-24TR3SDBTG	662	390	959	884	365	793	414
AS-24UR3SDBTG	662	390	959	884	365	793	414
AS-30UR3SDKVQ	662	390	959	884	365	793	414
AS-36UR3SDKVQ	662	390	959	884	365	793	414

4. Installation Instruction

To prevent abnormal heat generation and the possibility of fire, do not place obstacles, enclosures and grilles in front of or surrounding the air conditioner in a way that may clock air flow. And, more than 1 meter away from any antenna or power lines or connecting wires used for TV, radio, telephone, security system, or intercom. Electrical noise from any of these sources may affect operation.

4-1. Installation Place and Condition

Indoor unit

Avoid:

▵ direct sunlight.

▵ nearby heat sources that may affect performance of the unit.

▵ areas where leakage of flammable gas may be expected.

▵ places where large amounts of oil mist exist.

Do:

▵ Select an appropriate position from which every corner of the room can be uniformly cooled.

▵ Select a location that will hold the weight of the unit.

▵ Select a location where tubing and drain hose have the shortest run to the outside. (See a)

▵ Allow room for operation and maintenance as well as unrestricted air flow around the unit. (See b)

▵ Install the unit within the maximum elevation difference (H) above or below the outdoor unit and within a total tubing length (L) from the outdoor unit as detailed (See table 1 and c)

a	b	c
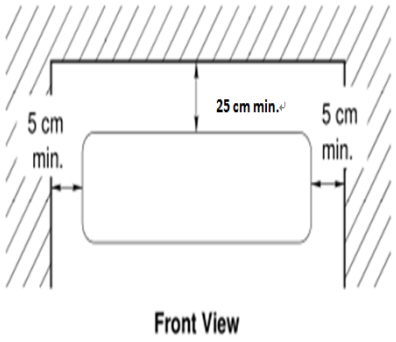	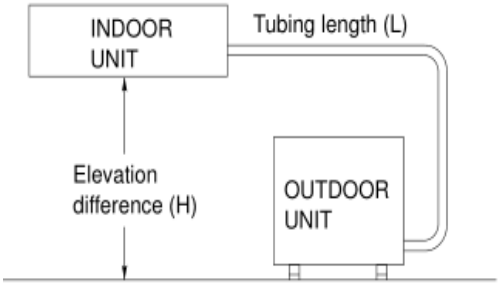	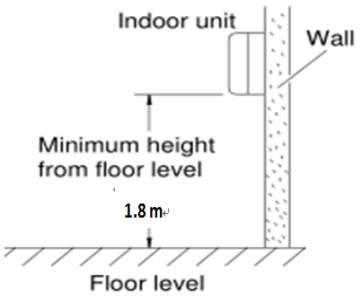

table 1

Capacity (Btu/h)	Pipe Size		Standard Length (m)	Max. Elevation B (m)	Max. Length A (m)	Additional Refrigerant (g/m)
	GAS	LIQUID				
5k~14k	3/8"(Ø9.52)	1/4"(Ø6.35)	7.5	7	15	20
	1/2"(Ø12.7)	1/4"(Ø6.35)	7.5	7	15	20
18k~28k	1/2"(Ø12.7)	1/4"(Ø6.35)	7.5	15	30	20
	5/8"(Ø15.88)	1/4"(Ø6.35)	7.5	15	30	20
	5/8"(Ø15.88)	3/8"(Ø9.52)	7.5	15	30	30
30k~38k	5/8"(Ø15.88)	3/8"(Ø9.52)	7.5	15	30	30
	3/4"(Ø19.05)	3/8"(Ø9.52)	7.5	15	30	50

* If total tubing length becomes 7.5 to 15 m (max.), charge additional refrigerant as the table1 for reference. And no additional compressor oil is necessary.

Outdoor unit

Avoid:

△ Heat sources, exhaust fans, etc.

△ Damp, humid or uneven locations.

DO:

▵ Choose a place as cool as possible.

▵ Choose a place that is well ventilated.

△ Allow enough room around the unit for air intake or exhaust and possible maintenance. (see a1, b1 & c1)
△ Provide a solid base (level concrete pad, concrete block, 10 × 40 cm beams or equal), a minimum of 10 cm above ground level to reduce humidity and protect the unit against possible water damage and decreased service life.
△ Install cushion rubber under unit's feet to reduce vibration and noise.
△ Use lug bolts or equal to bolt down unit, reducing vibration and noise.

a1	b1	c1
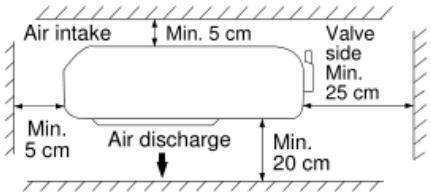	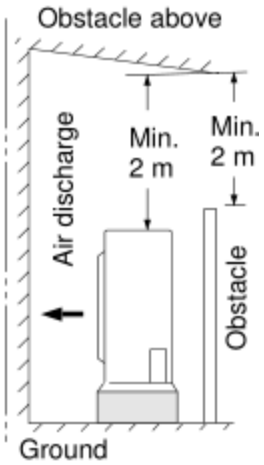	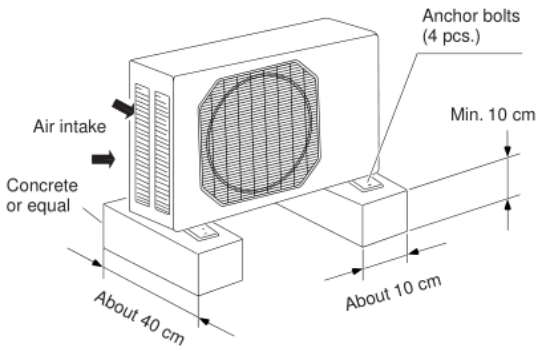

Recommended Wire Diameter:

Capacity size	Wire Diameter(mm^2)	Fuse or Circuit Breaker Capacity
5K~12k	1.0(Power wire)/1.0 (Connect wire)	3.15A (indoor) /15A (outdoor)
18k	2.5(Power wire)/1.5 (Connect wire)	3.15A (indoor) /20A (outdoor)
22K~30K	2.5(Power wire)/2.5 (Connect wire)	3.15A (indoor) /30A (outdoor)

4-2. Electric Wiring Diagram

Model	Indoor Unit DIAGRAM	Outdoor Unit DIAGRAM
AS-09UW4SVDTG9	1508588	1507746
AS-12UW4SVETG9	1508588	1507746
AS-18UW4SXATG	1802900	1826526
AS-22UW4SBBTG	1861005	1826526
AS-12UR5SXXQA	1851392	1826526
AS-12TR5SVETG1	1508588	1507746
AS-12UR5SVETG1	1508588	1507746

AS-18TR5SFATG	1802900	1515499
AS-18UR5SFATG	1802900	1515499
AS-22TR5SFBTG	1572795	1515499
AS-22UR5SFBTG	1572795	1515499
AS-12TR5SYDDB	1508588	1826526
AS-09TR3SVDTG	1854605	1854707
AS-09UR3SVDTG	1854605	1854707
AS-12TR3SVETG	1854605	1854707
AS-12UR3SVETG	1854605	1854707
AS-12UR3SVEDF	1854605	1854707
AS-18TR3SXATG	1854605	1854707
AS-18UR3SXATG	1854605	1854707
AS-18UR3SXADF	1854605	1854707
AS-24TR3SBBTG	1854698	1854707
AS-24UR3SBBTG	1854698	1854707
AS-24UR3SBBDF	1854698	1854707
AS-09TR3SVETG	1854605	1854707
AS-09UR3SVETG	1854605	1854707
AS-12TR3SXETG	1854605	1854707
AS-12UR3SXETG	1854605	1854707
AS-18TR3SBBTG	1854698	1854707
AS-18UR3SBBTG	1854698	1854707
AS-24TR3SDBTG	1854698	1854707
AS-24UR3SDBTG	1854698	1854707
AS-30UR3SDKVQ	1852066	1854707
AS-36UR3SDKVQ	1852066	1854707

Indoor:

1508588

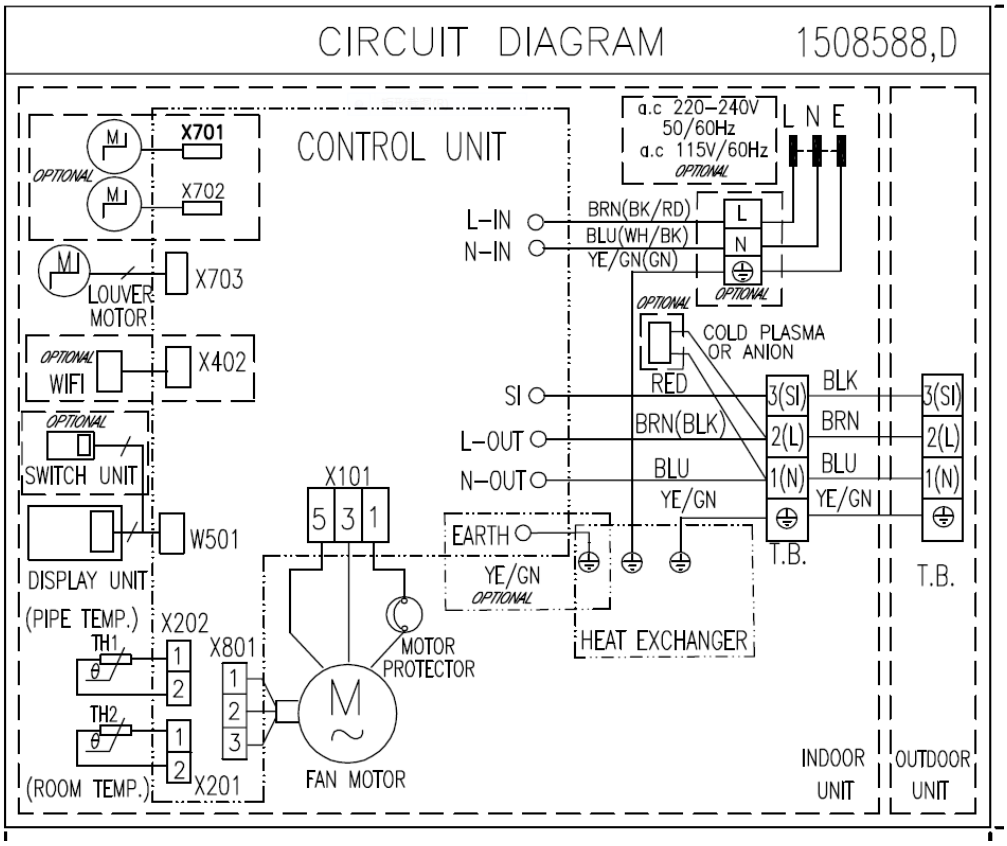

1802900

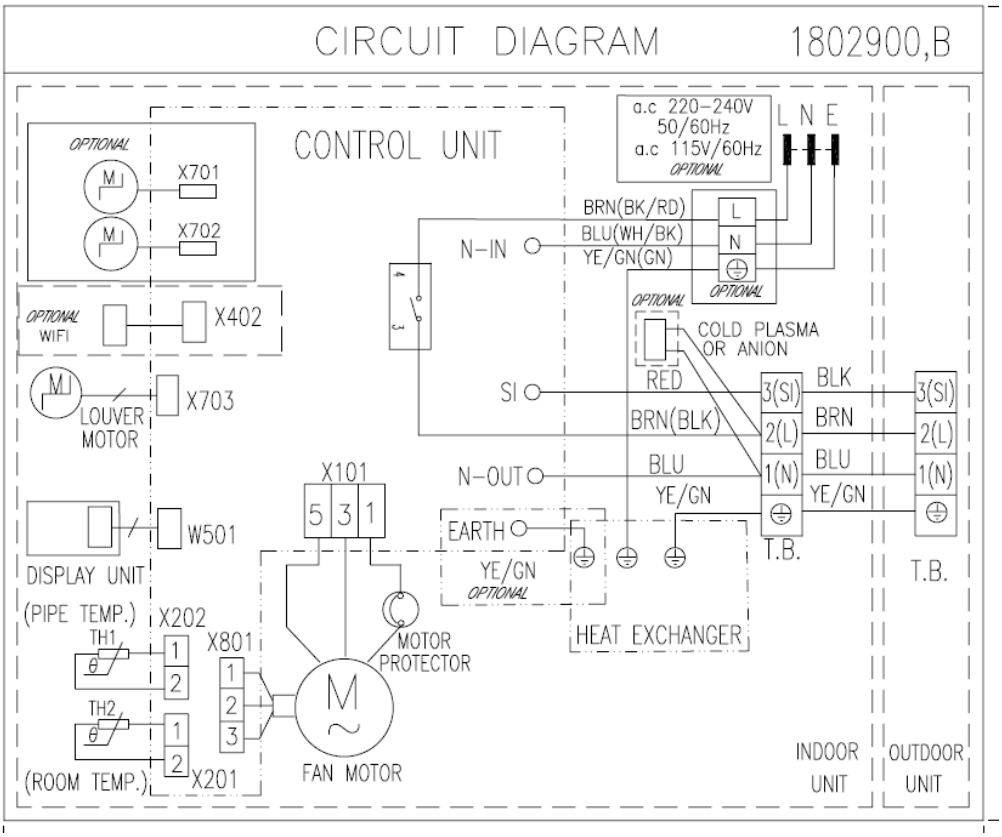

1852066

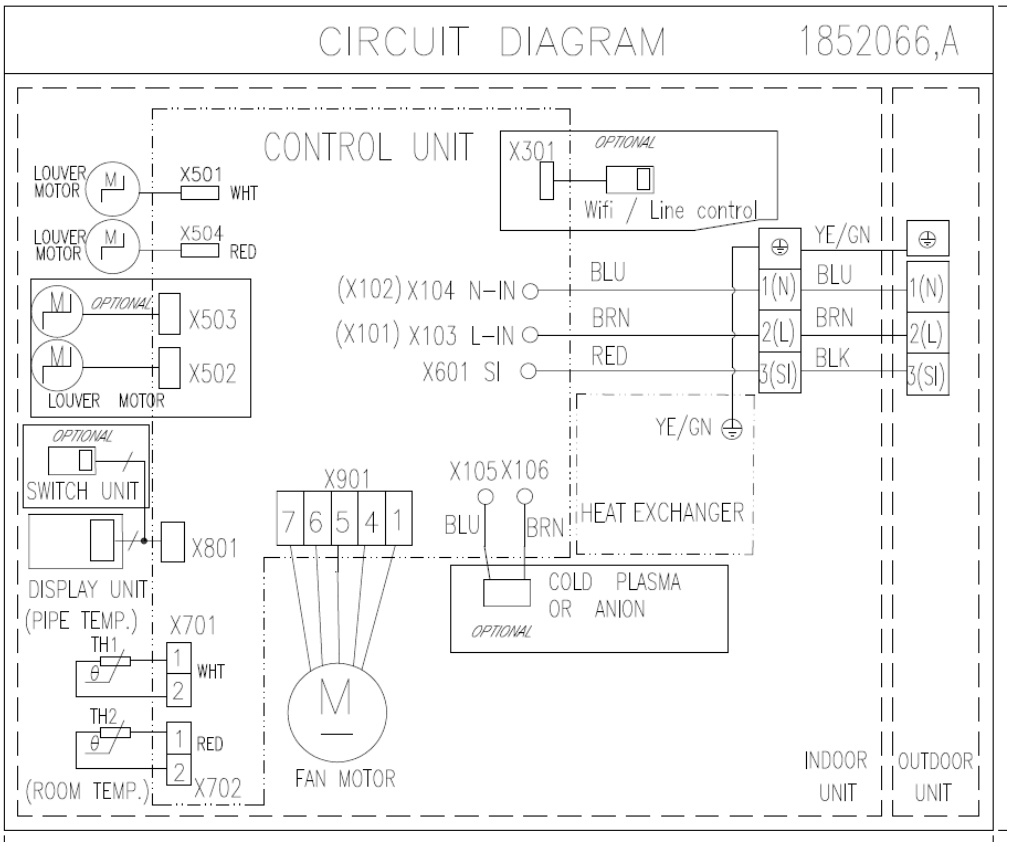

1572795

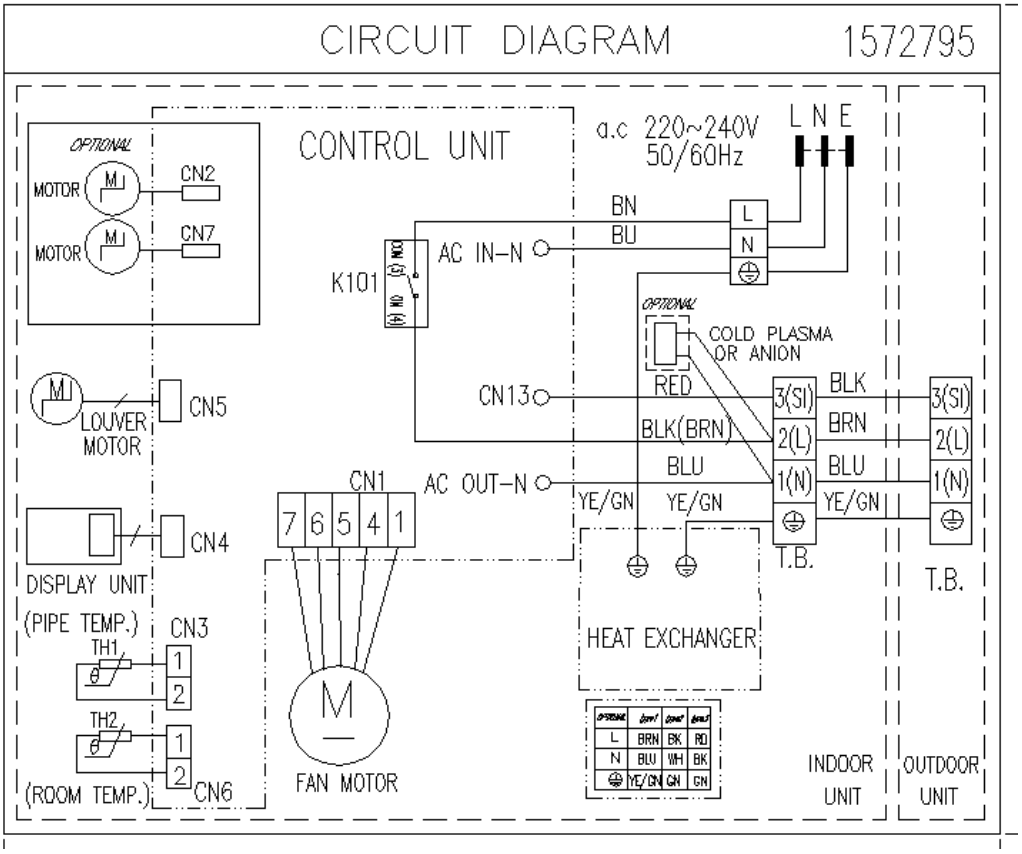

1861005

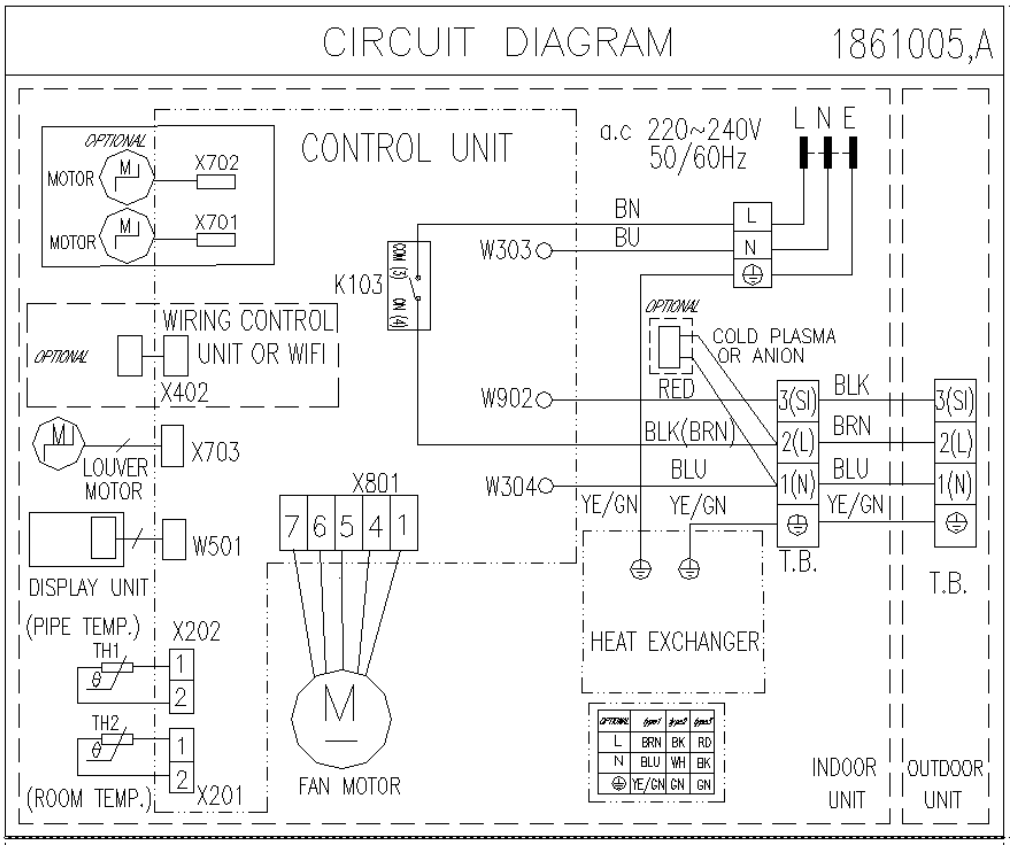

1851392

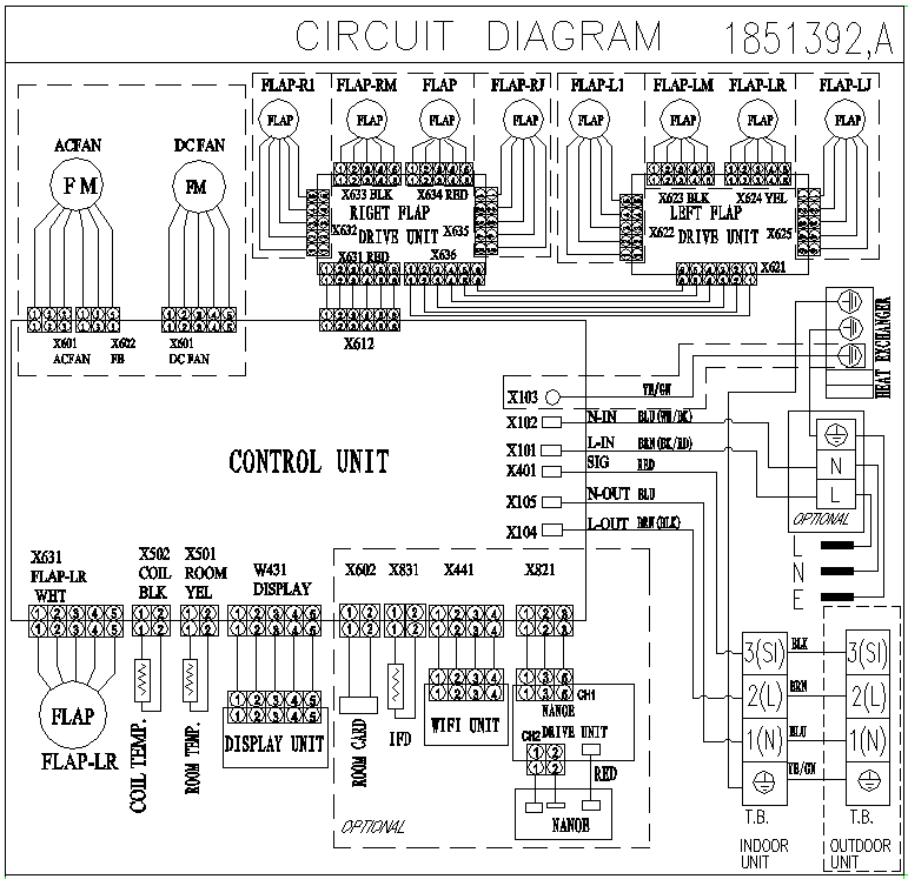

1854605

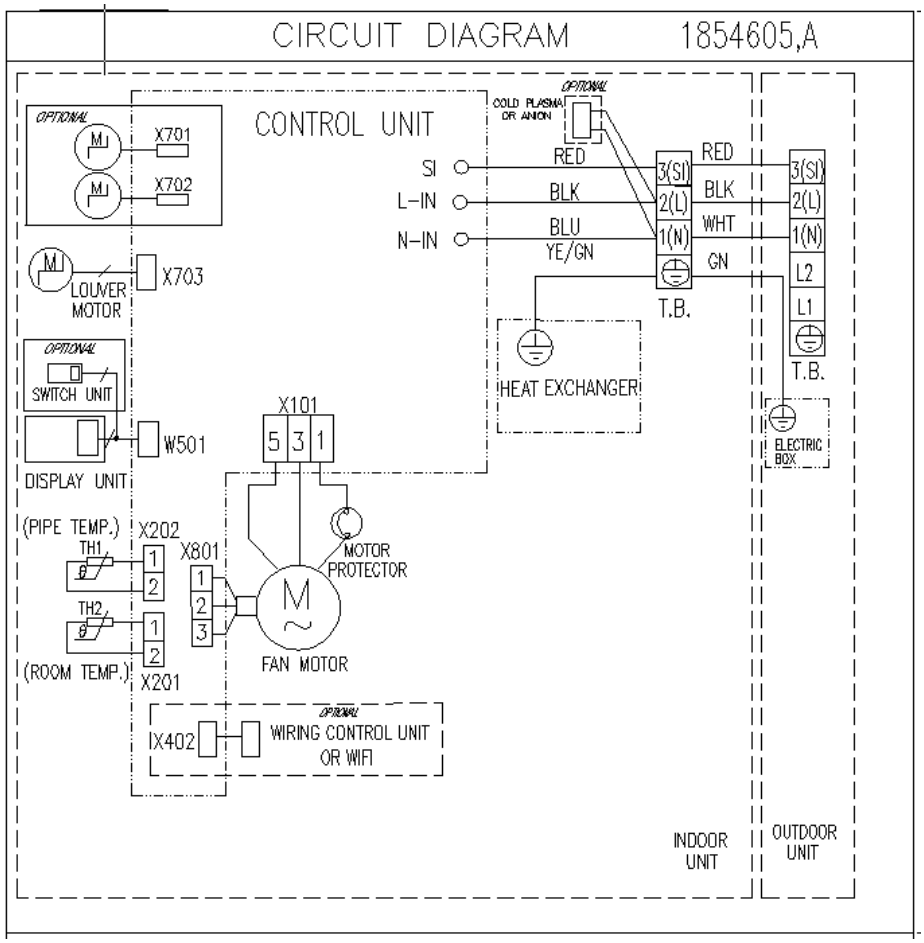

1854698

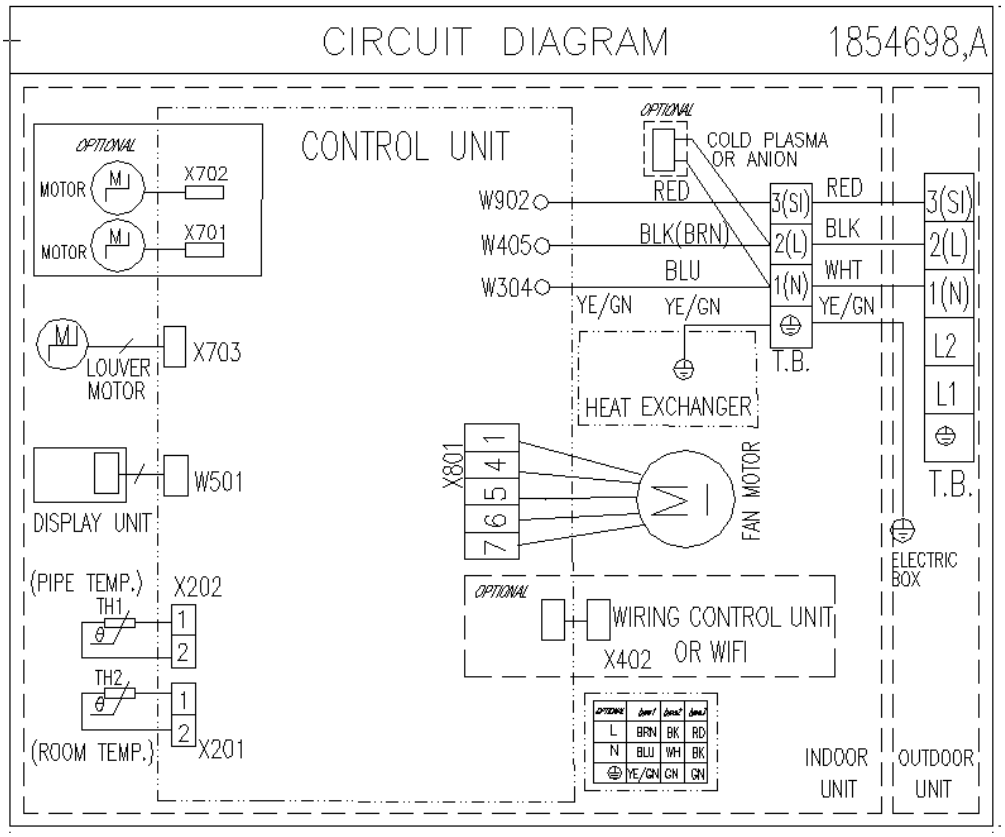

Outdoor:
1507746

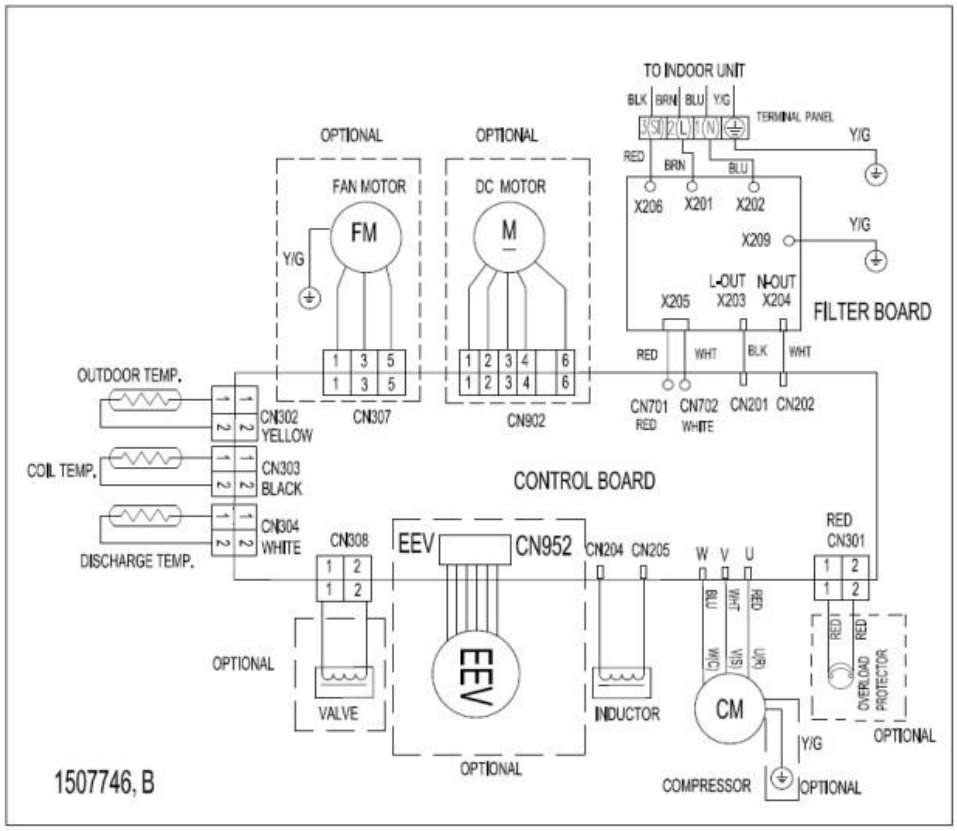

1515499

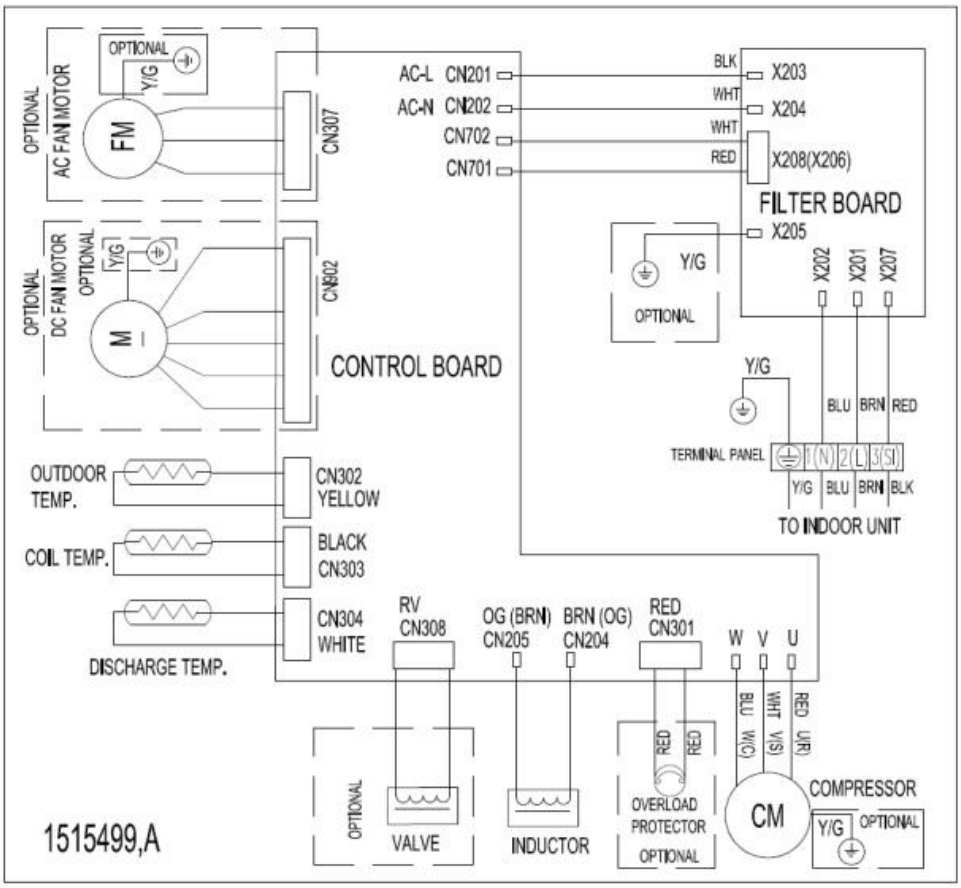

1826526

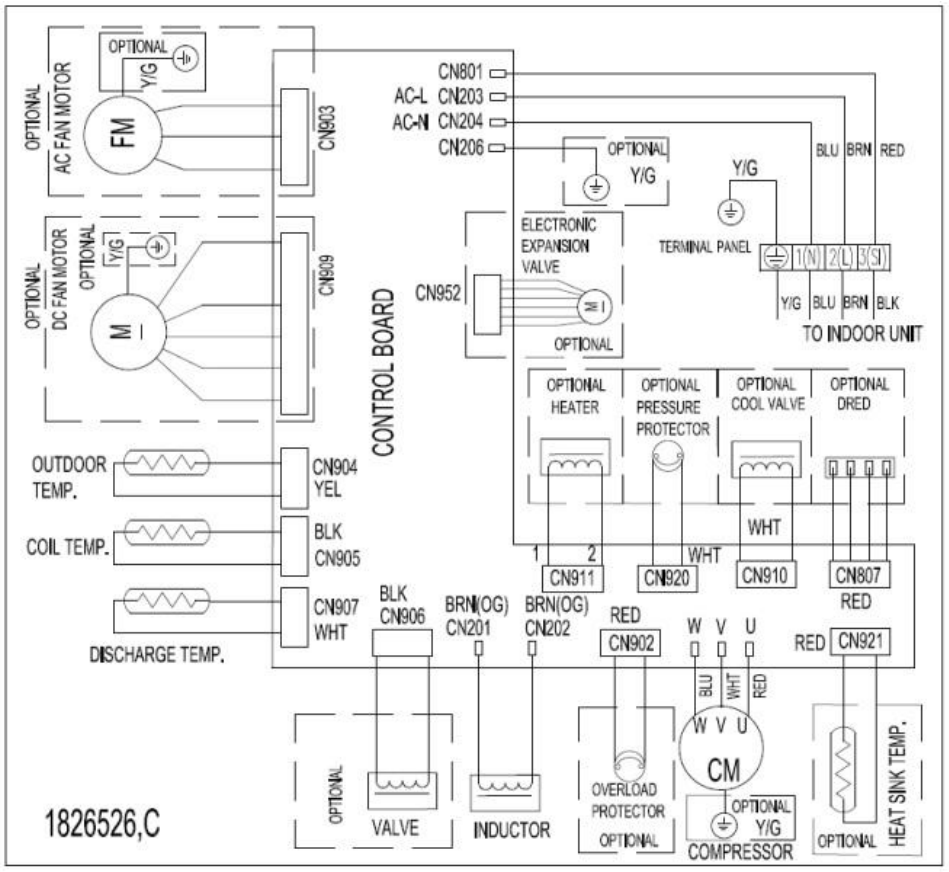
OPTIONAL
AC FAN MOTOR
FM
Y/G
CN903
OPTIONAL
DC FAN MOTOR
M
CN909
CN801
AC-L CN203
AC-N CN204
CN206
OPTIONAL
Y/G
BLU BRN RED
ELECTRONIC EXPANSION VALVE
CN952
TERMINAL PANEL
1(N) 2(L) 3(SI)
Y/G BLU BRN BLK
TO INDOOR UNIT
CONTROL BOARD
OPTIONAL HEATER
OPTIONAL PRESSURE PROTECTOR
OPTIONAL COOL VALVE
OPTIONAL DRED
OUTDOOR TEMP.
CN904 YEL
COIL TEMP.
BLK CN905
CN907 WHT
DISCHARGE TEMP.
CN911
CN920
WHT
CN910
CN807
RED
BLK CN906
BRN(OG) CN201
BRN(OG) CN202
RED CN902
W V U
RED CN921
BLU WHT RED
CM
OVERLOAD PROTECTOR
COMPRESSOR
HEAT SINK TEMP.
VALVE
INDUCTOR
1826526,C

1826526

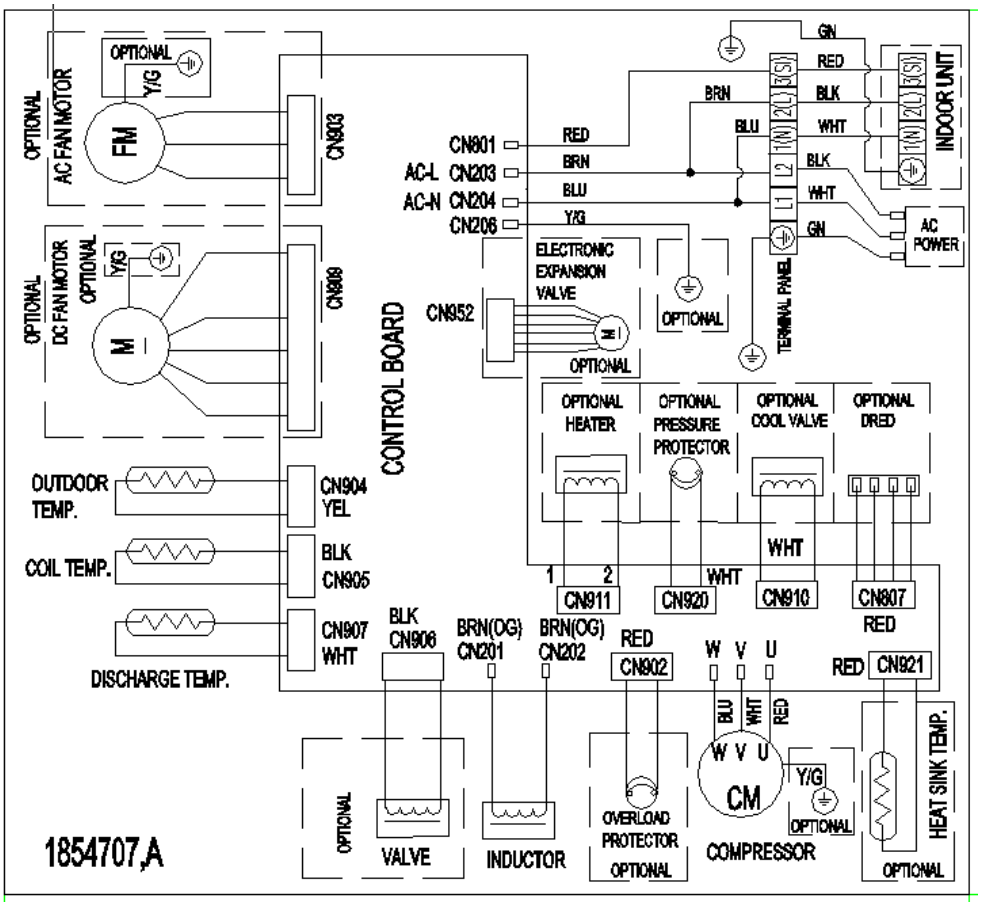
OPTIONAL
AC FAN MOTOR
FM
Y/G
CN903
OPTIONAL
DC FAN MOTOR
M
CN909
CN801
AC-L CN203
AC-N CN204
CN206
RED
BRN
BLU
Y/G
GN
INDOOR UNIT
AC POWER
L2
L1
ELECTRONIC EXPANSION VALVE
CN952
TERMINAL PANEL
CONTROL BOARD
OPTIONAL HEATER
OPTIONAL PRESSURE PROTECTOR
OPTIONAL COOL VALVE
OPTIONAL DRED
OUTDOOR TEMP.
CN904 YEL
COIL TEMP.
BLK CN905
CN907 WHT
DISCHARGE TEMP.
CN911
CN920
WHT
CN910
CN807
RED
BLK CN906
BRN(OG) CN201
BRN(OG) CN202
RED CN902
W V U
RED CN921
BLU WHT RED
CM
OVERLOAD PROTECTOR
COMPRESSOR
HEAT SINK TEMP.
VALVE
INDUCTOR
1854707,A

4-3. Refrigerant Flow System

(1)Cooling

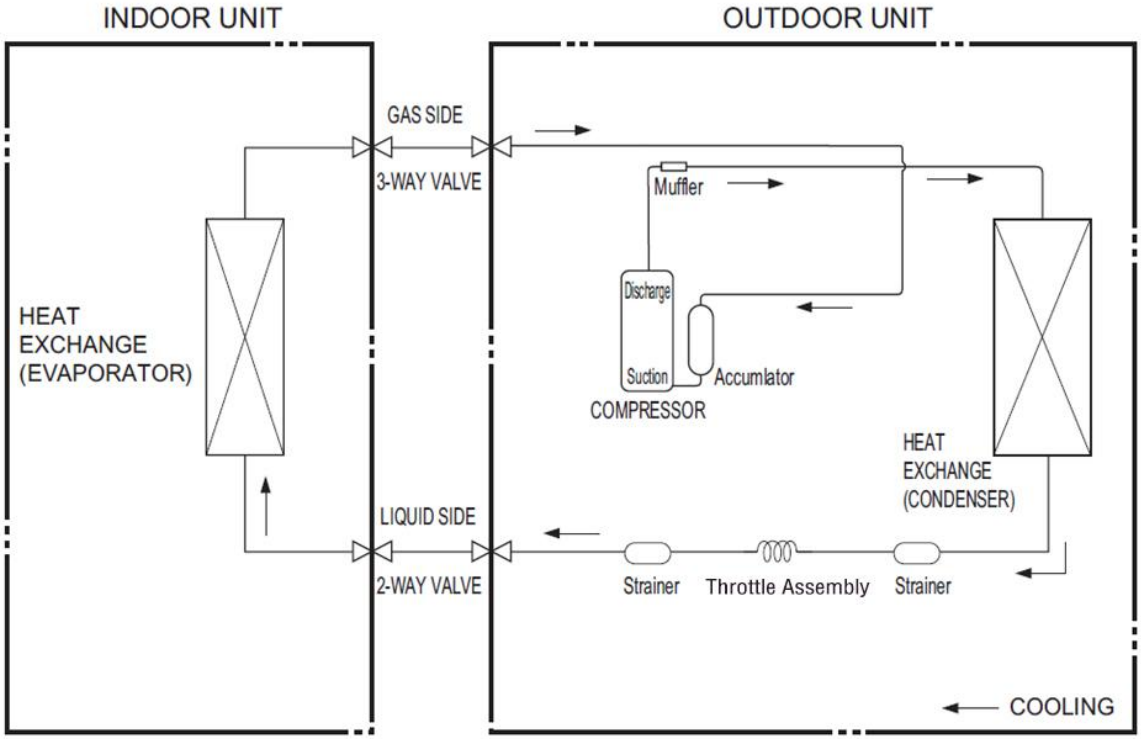

(2)Cooling&Heating

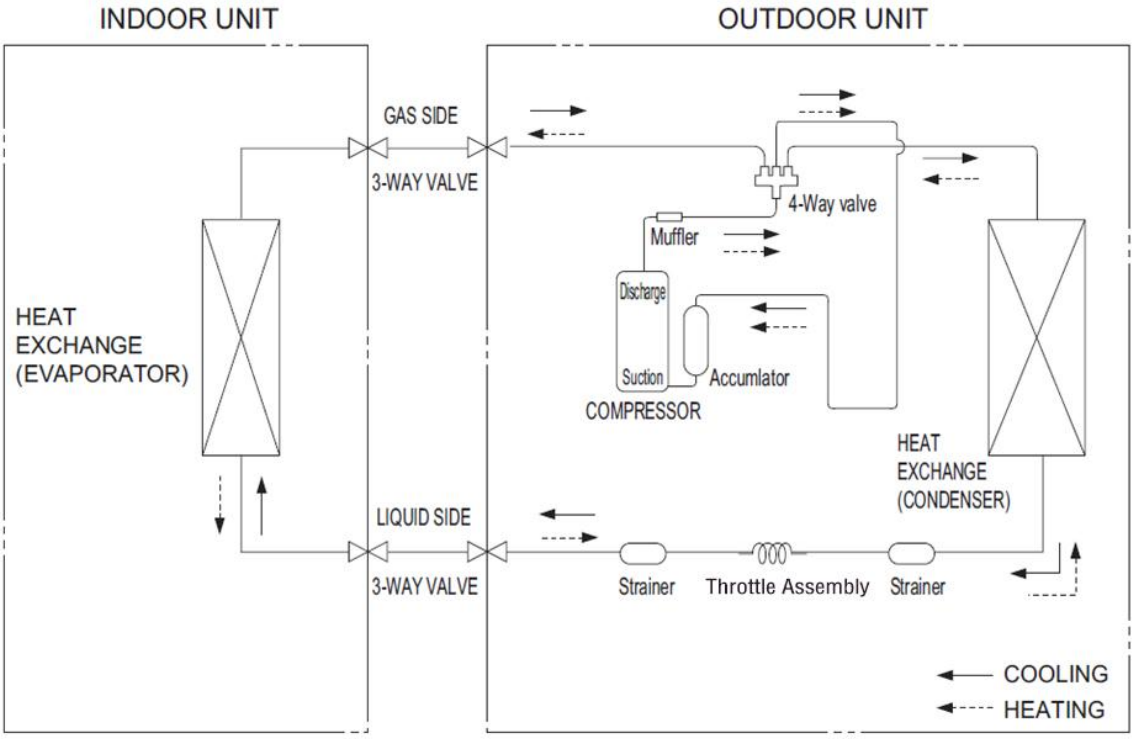

NOTE: In different models, the throttle assembly may be Capillary or Electronic expansion valve.

4-4. Air Purging and Leakage Test

1. Connect charging hose of manifold valve to charge end of low pressure valve (both high/low pressure valves must be tightly shut).
2. Connect joint of charging hose to vacuum pump.
3. Fully open the handle of Lo manifold valve.
4. Open the vacuum pump to evacuate. At the beginning, slightly loosen joint nut of low pressure valve to check if there is air coming inside. (If noise of vacuum pump has been changed, the reading of multimeter is 0) Then tighten the nut.
5. Keep evacuating for more than 15mins and make sure the reading of multi-meter is -1.0 X105 pa (-76cmHg).
6. Check the vacuum with the gage manifold valve, then close the gage manifold valve, and stop the vacuum pump.
7. Leave it for one or two minutes. Make sure the pointer of the gage manifold valve remains in the same position.
8. Remove the gage manifold valve quickly from the service port of the stop valve.
After refrigerant pipes are connected and evacuated, fully open all stop valves on gas and liquid pipe sides.
9. Opening without fully opening lowers the performance and cause dangerous.
10. Tighten the cap to the service port to obtain the initial status.
11. Retighten the cap
12. Leak test

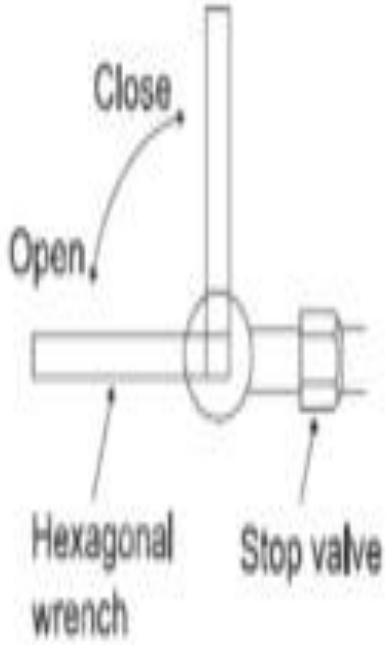

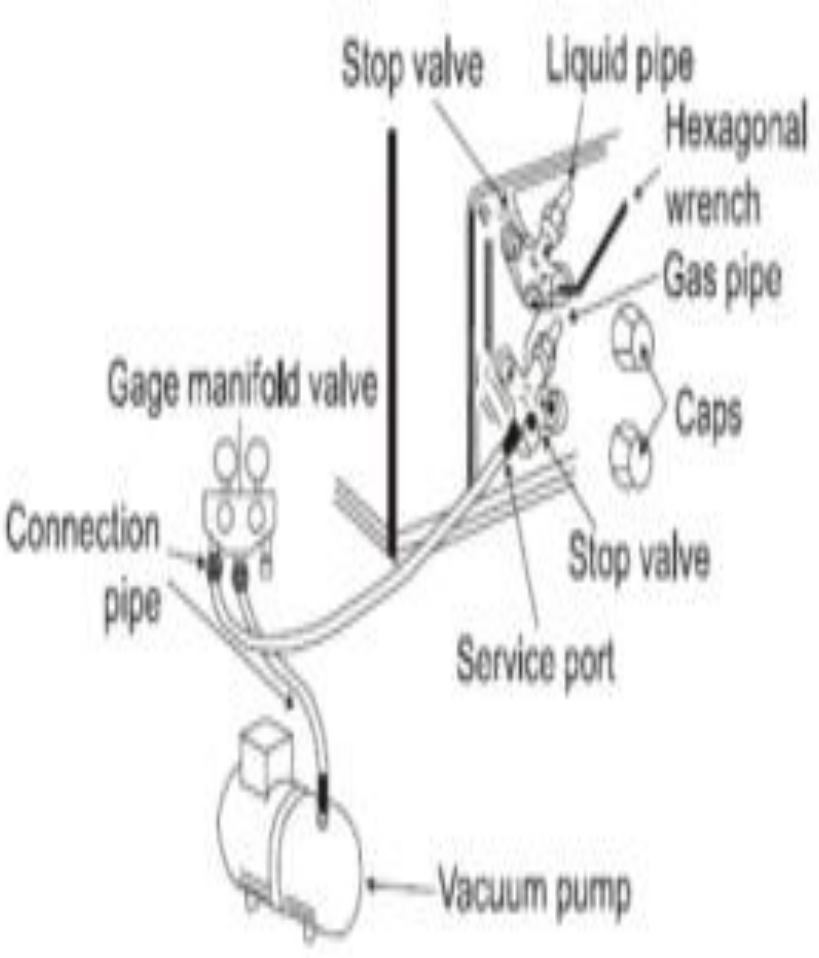

4-5. Test Running

△ Check after Installation

Items to be checked	Possible malfunction
Has it been fixed firmly?	The unit may drop, shake or emit noise.
Have you done the refrigerant leakage test?	It may cause insufficient cooling(heating)capacity
Is heat insulation sufficient?	It may cause condensation and dripping.
Is water drainage satisfactory?	It may cause condensation and dripping.
Is the voltage in accordance with the rated voltage marked on the nameplate?	It may cause electric malfunction or damage the product.
Is the electric wiring and piping connection installed correctly and securely?	It may cause electric malfunction or damage the part.
Has the unit been connected to a secure earth connection?	It may cause electrical leakage.
Is the power cord specified?	It may cause electric malfunction or damage the part.
Are the inlet and outlet openings blocked?	It may cause insufficient cooling(heating)capacity.
Is the length of connection pipes and refrigerant capacity been recorded?	The refrigerant capacity is not accurate.

△Operation Test

1. Before Operation Test
(1)Do not switch on power before installation is finished completely.
(2)Electric wiring must be connected correctly and securely.
(3)Cut-off valves of the connection pipes should be opened.
(4)All the impurities such as scraps and thrums must be cleared from the unit.

2. Operation Test Method
(1)Switch on power and press "ON/OFF" button on the remote controller to start the operation.
(2)Press MODE button to select the COOL, HEAT (Cooling only unit is not available), FAN to check whether the operation is normal or not.

5. Function Operation

5-1. Operation Range (cooling and heating）

Argentina Model ：

	Temperature	Indoor Air Intake Temp.	Outdoor Air Intake Temp
COOLING	Maximum	30	43 ℃
	Minimum	16℃	16℃
HEATING	Maximum	30℃	24℃
	Minimum	/	-10℃

Mexico Model ; North America SEER 16 Model：

	Temperature	Indoor Air Intake Temp.	Outdoor Air Intake Temp
COOLING	Maximum	30	46 ℃
	Minimum	16℃	16℃
HEATING	Maximum	30℃	24℃
	Minimum	/	-10℃

Mexico Glide Panel Model ; North America SEER 20 Model：

	Temperature	Indoor Air Intake Temp.	Outdoor Air Intake Temp
COOLING	Maximum	30	46 ℃
	Minimum	16℃	-10℃
HEATING	Maximum	30℃	24℃
	Minimum	/	-10℃

5-2. Remote Controller Operation & Function

▵Remote Controller Instruction

Remote controller

The remote controller transmits signals to the system.

SMART(invalid for multi system)
Used to enter fuzzy logic operation directly, regardless of the unit is on or off.

POWER
The appliance will be started when it is energized or will be stopped when it is in operation, if you press this button.

SUPER
Used to start or stop the fast cooling/heating. (Fast cooling operates at high fan speed with 16℃ set temp automatically ; Fast heating operates at auto fan speed with 30℃ set temp automatically)

IFEEL
Used to set IFEEL Mode operation,press the I FEEL button for about 5 seconds, the transmit signal in the display will disappear, the I FEEL function will be shunted off.

SWING
Used to stop or start vertical adjustment louver swinging and set the desired up/ down airflow direction.

8° HEAT(optional)
Used to set 8° HEAT Mode.

QUIET
Used to set or cancel Quiet Mode operation.

TEMP + -
Used to adjust the room temperature and the timer, also real time.

MODE
Press this button to select the operation mode.

FAN
Used to select fan speed in sequence auto, higher, high, medium, low and lower.

SLEEP
Used to set or cancel Sleep Mode operation.

SWING
Used to stop or start Horizontal adjustment louver swinging and set the desired left/right airflow direction.

TIMER ON/CLOCK
Used to set or cancel the timer operation and used to set the current time.

TIMER OFF
Used to set or cancel the timer operation.

ECONOMY
Used to set or cancel Economy Mode operation.

DIMMER
When you press this button, all the display of indoor unit will be closed. Press any button to resume display.

Indication symbols on LCD:

Cooling indicator	Dry indicator	Fan only indicator	8° Heating indicator	Heating indicator
Auto fan speed	Higher fan speed	High fan speed	Medium fan speed	Low fan speed
Lower fan speed	Sleep 1 indicator	Sleep 2 indicator	Sleep 3 indicator	Sleep 4 indicator
Smart indicator	Quiet indicator	Economy indicator	Super indicator	ON OFF 88:88 Display set timer / Display current time
Signal transmit	Ifeel	88 ℃ Display set temperature		Battery power indicator

Note: Each mode and relevant function will be further specified in following pages.

Remote controller

The remote controller transmits signals to the system.

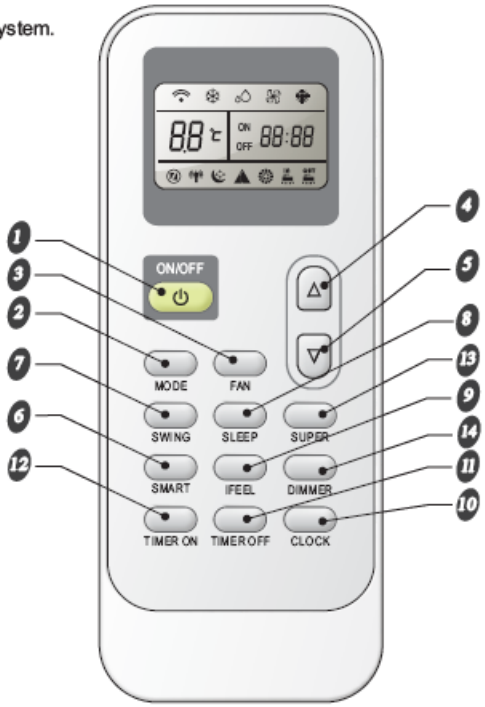

1 ON/OFF BUTTON
The appliance will be started when it is energized or will be stopped when it is in operation, if you press this button.

2 MODE BUTTON
Press this button to select the operation mode.

3 FAN BUTTON
Used to select fan speed in sequence auto, high, medium or low.

4 5 ROOM TEMPERATURE SETTING BUTTONS
Used to adjust the room temperature and the timer, also real time.

6 SMART BUTTON
Used to enter fuzzy logic operation directly, regardless of the unit is on or off.

7 SWING BUTTON
Used to stop or start vertical adjustment louver swinging and set the desired up/down airflow direction.

8 SLEEP BUTTON
Used to set or cancel Sleep Mode operation.

9 IFEEL BUTTON
Used to set IFEEL mode operation. Press it once, the IFEEL function will be started. Press it again, the IFEEL function will be shut off.
If the IFEEL function can't be shut off, please try to press this button about 5 seconds.
Advice to put the remote controller in the place where the indoor unit receive signal easily.
Advice to cancel the IFEEL mode so as to save energy when stopping the air conditioner.

10 CLOCK BUTTON
Used to set the current time.

11 12 TIMER ON/OFF BUTTON
Used to set or cancel the timer operation.

13 SUPER BUTTON
Used to start or stop the fast cooling/heating. (Fast cooling operates at high fan speed with 18℃ set temp automatically ; Fast heating operates at auto fan speed with 32℃ set temp automatically)

14 DIMMER BUTTON
When you press this button, all the display of indoor unit will be closed. Press any button to resume display.

Indication symbols on LCD:

Cooling indicator	Auto fan speed	Smart indicator	Signal transmit
Dry indicator	High fan speed	Sleep indicator	ON OFF 88:88 Display set timer / Display current time
Fan only indicator	Medium fan speed	Ifeel	
Heating indicator	Low fan speed	Super indicator	88 ℃ Display temperature

Note: Each mode and relevant function will be further specified in following pages.

△Function Instruction

1. Major general technical parameters

1-1 Remote receiver distance（front of the air conditioner）: 8 m.

1-2 Remote receiver angle: Less than 60 degrees.

1-3 Temperature control accuracy: ±1℃.

1-4 Time error: Less than 1%.、

2. Functions of the controller

2-1 Display panel

I. Control functions of the remote controller (See operating and installation manual)

II. Display of the indoor unit

Information on the screen:

Displaying Scheme:

7-segment tube: Display set temperature or indoor temperature , and display fault code in trouble indicating. An error code is displayed according to the signal from the indoor CPU. The error code will

flash for 5 seconds while displayed.

Running LED：It is on during operation. It is flashing when the unit defrost.

TIMER LED：When the timer mode works, the LED will be lighted.

Sleep LED：When the sleep mode works, the LED will be lighted, and after 10s, the LED will be off.

Compressor LED：It lights up when compressor is running.

Remote control receiver： This section receives signals from the remote control.

3. Control function

3-1 Emergency switch

If the appliance under the Stand-by state, all the Operation Mode, Air volume, Temperature Setting , Forced Cooling function will be restored as the last time setting when you press on the "ON/OFF" button, but lost the Air flow direction setting.

If the appliance was connected to the power at first time, it would operate in the auto mode, It will keep in stand-by state if you press the "ON/OFF" button during the normal operation.

When the appliance under the Stand-by state, press and hold the emergency switch for 5 seconds, the buzzer rings for 1 times, and it will operate in cooling mode, and the indoor fan speed is set to high-speed, it running has nothing to do with the room temperature.

When press the emergency switch or receive the signal of the remote control, it will exit this mode, and it will operate with the corresponding order.

3-2 Operator-machine communication

If the unit has I feel function, when the I feel function is set by the remote control, the room temperature will depend on the remote control and it will be detected by the sensor of the remote control. Normally the remote control will automatically transmits a signal at an interval of 10 minutes（only for H1 remote control, it is 9 minutes）, but if the room temperature changed exceed 1℃ in a short period of time, the remote control will transmits a signal within 2 minutes. If the indoor unit has not received a remote signal within 30 minutes, the room temperature will depend on the room temperature sensor of indoor unit.

3-3 Timer function

Real time of Timer setting

(1) The max Timer ranges is 24 hours.

(2) Timer ON/OFF

(3) Timer ON/OFF can be set available in turn.

(4) The Timer accurate more than 97%

(5) The Timer can be adjusted by 1 min increase.

(6) The appliance can be set the ON-Timer and OFF-Timer in the same time, but no any timer setting indicated.

3-4 Sleep

(1)The Sleep mode can only be set during Cool, Heat and Dry mode.

（2）When the appliance run in the Sleep mode, it will stop after 8 hours operation, then it will cancel the Sleep setting. When the appliance operate under the OFF-Timer setting condition, if the

OFF-Timer setting less than 8 hours, it will keep the Sleep mode till the OFF-Timer setting; if the OFF-Timer setting more than 8 hours, it will cancel the OFF-Timer setting after the Sleep mode OFF.

（3）When the Sleep mode is select with Cooling mode, if the room temperature not less than 26℃, the setting temperature will not be adjusted, otherwise, the setting temperature will be raised by 1℃ per hour, but the max setting temperature raise is 1℃.

（4）When the Sleep mode is select with Heat mode, the setting temperature will be decreased by 1℃ per hour during the successive 3 hour, but the max setting temperature decrease is 3℃.

（5） When the appliance operate with Sleep mode, the indoor fan run in the LOW setting, and the air flow direction same as the last setting and the temperature and air flow direction can be adjusted by user. The Running indicator will be flashed 10 times per 1 Hz frequency, then all the indicators turn OFF except the Sleep light after 5 min elapse. Those indicators will be recovery when the temperature or Time setting is adjusted, after the setting, the indicators will be lit in 10 sec, then turn OFF.

3-5 Automatic run (SMART) mode

When the appliance operates at the smart, the air flow direction can be adjusted.

(1) H/C appliance

a. When the setting temperature is 26℃, the appliance will be ran in the Cool if the room temperature exceeds 26℃.

b. When the room temperature exceeds 23℃, but below 26℃, it will be ran in the Dry mode(It will turn in Automatic setting After 3 min LOW air volume running.).

c. When the room temperature exceeds 21℃, but below 23℃, it will be operated in the Fan only, the air volume is set by LOW and the fan speed can be adjusted

d. When the room temperature is not more than 21℃, it will be operated in Heat mode, and the temperature is set to 22℃.

(2) Cool only appliance

a. When the room temperature exceeds 26℃, it will be ran in Cool mode, and the temperature is set to 26℃.

b. When the room temperature exceeds 23℃, but not more than 26℃, it will be operated in the Dry mode.

c. When the room temperature is not more than 23℃, it will be operated in the Fan only, the air volume is set to LOW and the fan speed can be adjusted

After the appliance start the smart operation, the setting temperature can be adjusted 2℃ or 7℃ (based on the remote mode)(the min accuracy is 1℃) up and down base on the automatic temperature setting, also the presetting temperature of PCB circuit.

In case of the specific operation selected, it could be re-select the other modes after the compressor ceased for 5 min or the setting temperature changed.

3-6 Cooling-run mode

3-6-1 Outdoor Fan

The outdoor fan's speeds except the single speed motor can be changed according to outdoor ambient temperatures.

When operating at a fixed frequency, the outdoor fan is forced to operate at the high speed.

3-6-2 Indoor fan operation

(1）When the indoor fan keep in running condition, this operation state could be controlled by the remote control with High, Median, Low and Automatic setting.

(2）When the appliance is set Automatic condition in the Cool mode for the first time, the fan speed will run at Low setting. After that, temperature and fan speed is shown as following.

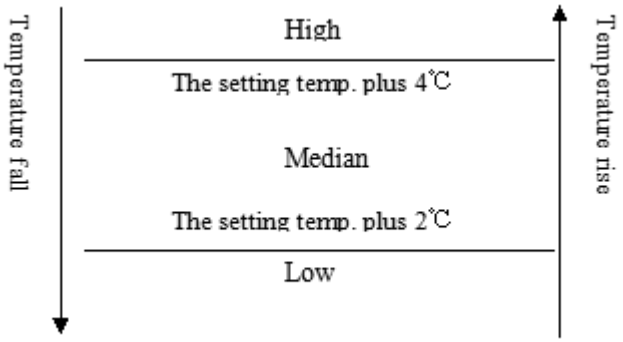

When the difference between the setting temperature and the room temperature equal to 2℃ or 4℃, the indoor fan speed will keep in current speed.

3-6-3 Air flow direction control

The louver is derived by a step motor, and it swings the horizontal louver automatically. Press the SWING button to swing or stop the louver.

During the louver swing in normal operation, the current position will be stored. When the appliance turn off and louver swing automatically to the default position, it will position at the close position plus 5º.

3-6-4 4-way valve

State: It is interrupted in cooling.

Switchover: When initially powered on for cooling, the 4-way valve is interrupted immediately. When the heating is changed to the cooling, it needs an interval of 50 seconds for the 4-way valve to change over from being activated to being interrupted.

3-7 Heating-run mode

3-7-1 Temperature compensation

The temperature compensation is 5º in heating mode. For example, if the set temperature is 25℃ by the remote control, when the room temperature is detected with 31℃, the compressor will turn off. The main reason is that the hot air is condensed at the top of the house.

Note: The compensation is available only if the room temperature sensor of indoor unit is used and it is not available when it is subject to the sensor on the remote control.

3-7-2 Indoor fan motor operation

Anti-cold air system:

When the appliance run in Heat mode condition, the indoor fan motor operation is shown as following to prevent the cooling air come out during the appliance operation.

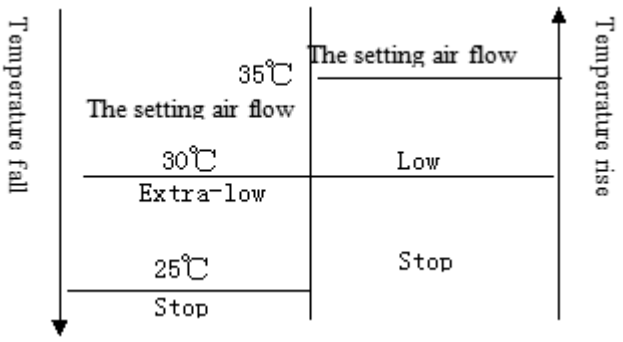

When the appliance turn in the anti-cold air system in the Extra-LOW (Tapped motor set in LOW, sic passim) during the compressor operation, the louver swang to the Cool air protection position, the louver recovers to the original position after the air volume change to LOW. When the room temperature reach to the setting temperature, the compressor will be turn off, and the air flow change to LOW, the louver swang to the Cool air protective position to prevent the air drop into human body directly; when the indoor pipe coil temperature drop continuously, it will turn in the Cooling air protective system in the Extra-LOW or stop the fan motor.

The indoor fan motor is only controlled by the signal of indoor pipe coil temperature, no matter the compressor turn ON/OFF, even the appliance turn in Heat mode at first time.

The indoor fan motor will operate according to the different setting(High, Median, Low and Automatic) by the remote control, but the anti-cold air system is prior.

When the appliance run in the Heat mode with the Automatic setting at first time, the fan speed will be in the LOW setting, and the operation diagram is shown as following

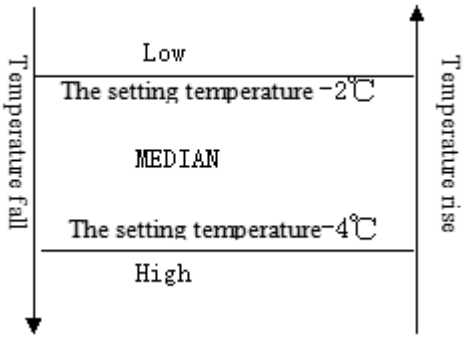

When the difference between the setting temperature and the room temperature equal to 2℃ or 4℃, the indoor fan speed will keep in current speed.

3-7-3 Air flow direction control

The horizontal louver is controlled by a step motor, press the SWING button to swing or stop the louver.

During the louver run in normal operation, the current position will be stored. When the appliance turn off and louver swing automatically to the default position, it will position at the default

position plus 5º.

4-3-8-4 Outdoor fan

The outdoor fan speeds except single speed motor can be changed according to outdoor ambient temperatures.

3-7-6 4-way valve

State: It is electrified in heating.

Switchover: When initially powered on for heating, the 4-way valve is activated immediately.

In the change from cooling to heating, it needs an interval of 50 seconds for the 4-way valve to change over from being interrupted to being activated.

3-8 The super function (option)

In cooling mode, when you press the SUPER button by remote control, the unit will operate for 15 minutes with the following setting:

a. The set temperature is 16℃;
b. The fan speed with highest speed;
c. The compressor runs with high frequency.

3-9 Dehumidifying mode

The dehumidifying mode is illustrated as follows:

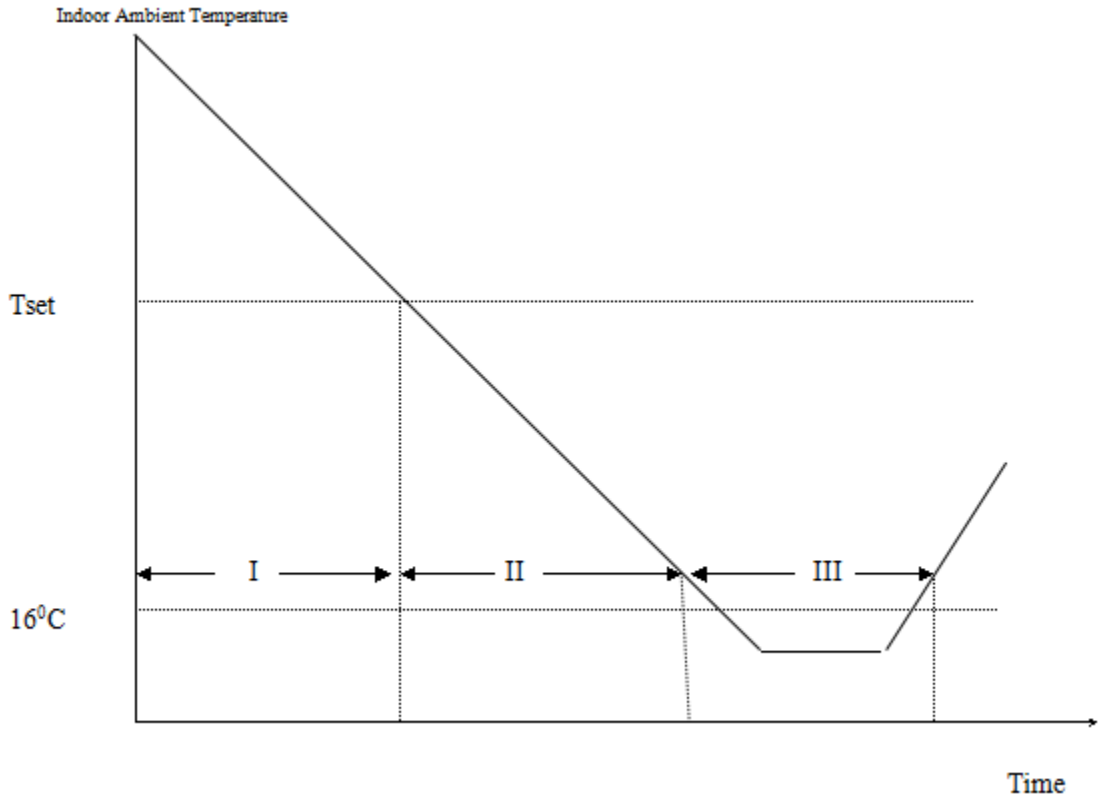

Dehumidifying area I: Operation at the frequency in the range (30–60Hz) according to Dt ($T_{indoor\ ambient}$-T_{set}).

Dt(℃)	f(Hz)
0	30

0.5	30
1	40
1.5	50
≥2	60

Dehumidifying area II: The compressor stops for 5 minutes and operators for 5 minutes at the lowest frequency.

Dehumidifying area III: The compressor stops.

3-10 Fan Only Mode Operation

During the appliance run in this mode, the compressor and outdoor fan stop, the indoor fan operate under the pre-setting of air volume, and the louver swing, and the indoor fan speed same as the Heating Mode.

5-3. Special Function Fnstruction

Conditions of anti-freezing prohibition of frequency rising:

Condition 1: in the case of anti-freezing frequency decreasing, the temperature of indoor heat exchanger rises to “anti-freezing frequency decreasing temperature”.

Condition 2: in normal operation, the temperature of indoor heat exchanger reaches “anti-freezing prohibition of frequency rising temperature”.

Either of the above two conditions is met, the product will enter anti-freezing prohibition of frequency rising state.

Anti-freezing prohibition of frequency rising operation: the compressor is kept at the current frequency, which may decrease according to situations while cannot rise. The outdoor fan runs.

Condition for the end of anti-freezing prohibition of frequency rising state: when the temperature of indoor heat exchanger rises to “anti-freezing releasing temperature”, the state of anti-freezing prohibition of frequency rising is released.

Conditions for defrosting:

A: When the heating compressor consecutively runs for 40 minutes (EEPROM setting value at the current operating mode);

B:If the ambient temperature minus the temperature of coiled pipe is equal to or higher than six degrees centigrade (EEPROM setting value in the current operating mode);

C:If the temperature of coiled pipe is equal to or lower than minus two degrees centigrade (EEPROM setting value in the current operating mode);

If the above three conditions are met simultaneously, defrosting begins.

Defrosting actions:

The compressor stops, and the outdoor fan stops after delay of 30 seconds; in 50 seconds the four-way valve is power off; and in 10 seconds the compressor starts and runs at “defrosting frequency”.

Conditions for ending defrosting:

Defrosting is over if either of the below conditions is met.

A：The accumulated time of defrosting is longer than 12 minutes (EEPROM setting value in the current operating mode);

B：If the temperature of coiled pipe is equal to or higher than 14 degrees centigrade (EEPROM setting value in the current operating mode);

Actions of exiting the defrosting state:

The compressor stops, and 50 seconds later the four-way valve opens, and another 10 seconds later the compressor and outdoor fan restart and begin normal operation.

6. Electrical Characteristics

6-1. Print Circuit Board (Indoor & Outdoor)

Model of indoor unit:

AS-12TR5SVETG1、AS-12UR5SVETG1、AS-12TR5SYDDB 、AS-18TR5SFATG AS-18UR5SFATG

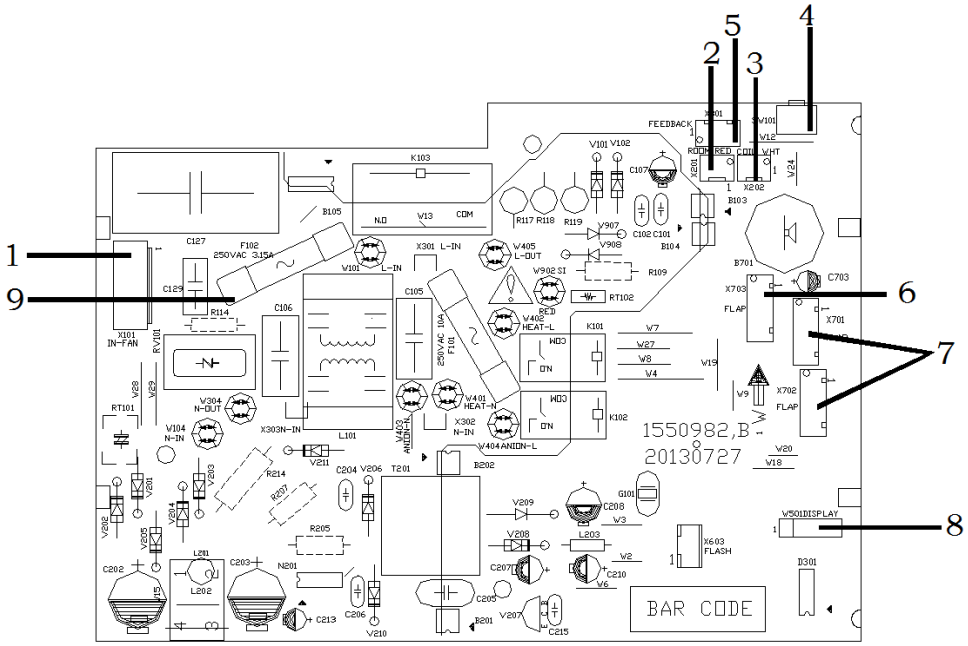

1	Interface of PG motor
2	Room temperature sensor
3	Pipe temperature sensor
4	Switch button
5	Feedback from PG motor
6	Up&down swing
7	Left&right swing
8	Display interface
9	Protective tube

AS-09UW4SVDTG9 、 AS-12UW4SVETG9 、 AS-09TR3SVDTG 、 AS-09UR3SVDTG 、 AS-12TR3SVETG、AS-12UR3SVETG、AS-12UR3SVEDF、AS-09TR3SVETG、AS-09UR3SVETG、 AS-12TR3SXETG 、 AS-12UR3SXETG 、 AS-18UW4SXATG 、 AS-18TR3SXATG 、 AS-18UR3SXATG、AS-18UR3SXADF

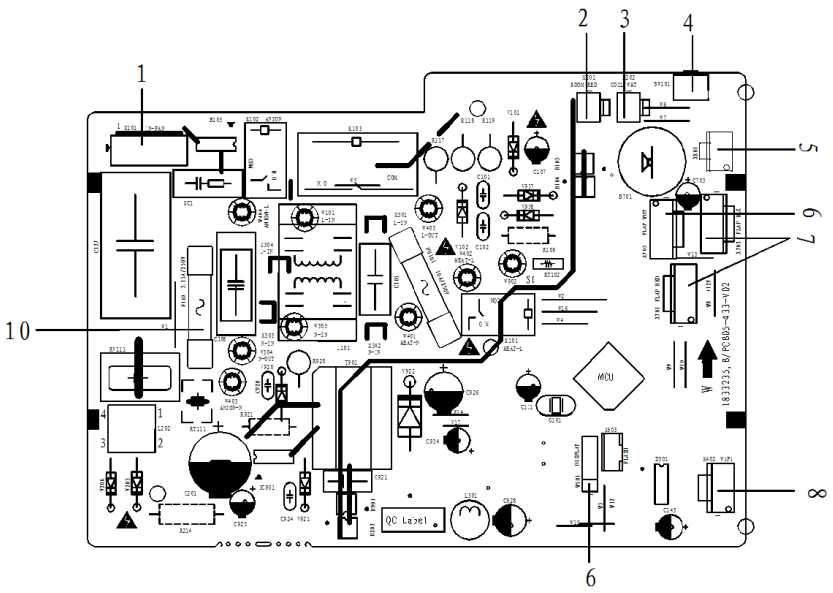

1	Interface of PG motor
2	Room temperature sensor
3	Pipe temperature sensor
4	Switch button
5	Feedback from PG motor
6	Up&down swing
7	Left&right swing
8	Wiring control or wifi interface
9	Display interface
10	Protective tube

AS-12UR5SXXQA

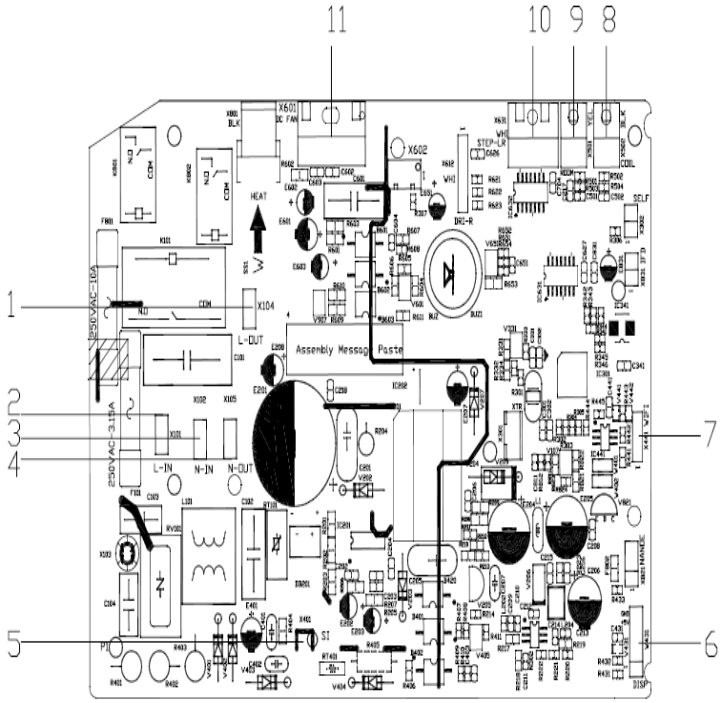

1	L-□UT
2	L-IN
3	N-IN
4	N-□UT
5	Communication interface□□□□□□ □□□□□□
6	Display board
7	Wifi unit
8	Pipe temperature sensor
9	Room temperature sensor
10	Left&Right swing
11	DC motor

AS-22UW4SBBTG 、AS-24TR3SBBTG 、AS-24UR3SBBTG 、AS-24UR3SBBDF 、AS-18TR3SBBTG 、AS-18UR3SBBTG、AS-24TR3SDBTG、AS-24UR3SDBTG、

1	Interface of PG motor
2	Room temperature sensor
3	Pipe temperature sensor
4	Switch button
6	Up&down swing
7	Left&right swing
8	Display interface
9	Protective tube

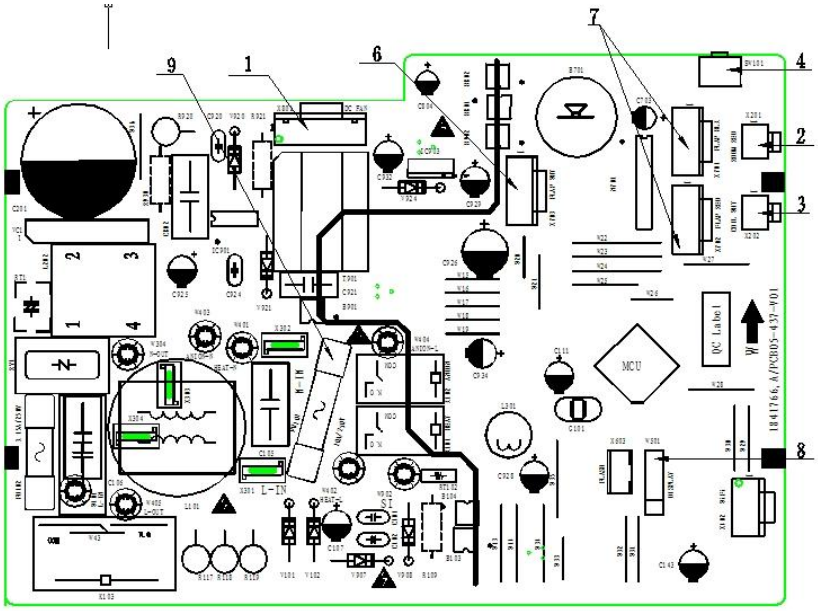

AS-22TR5SFBTG 、AS-22UR5SFBTG 、

1	Interface of PG motor
2	Room temperature sensor
3	Pipe temperature sensor
4	Switch button
6	Up&down swing
7	Left&right swing
8	Display interface
9	Protective tube

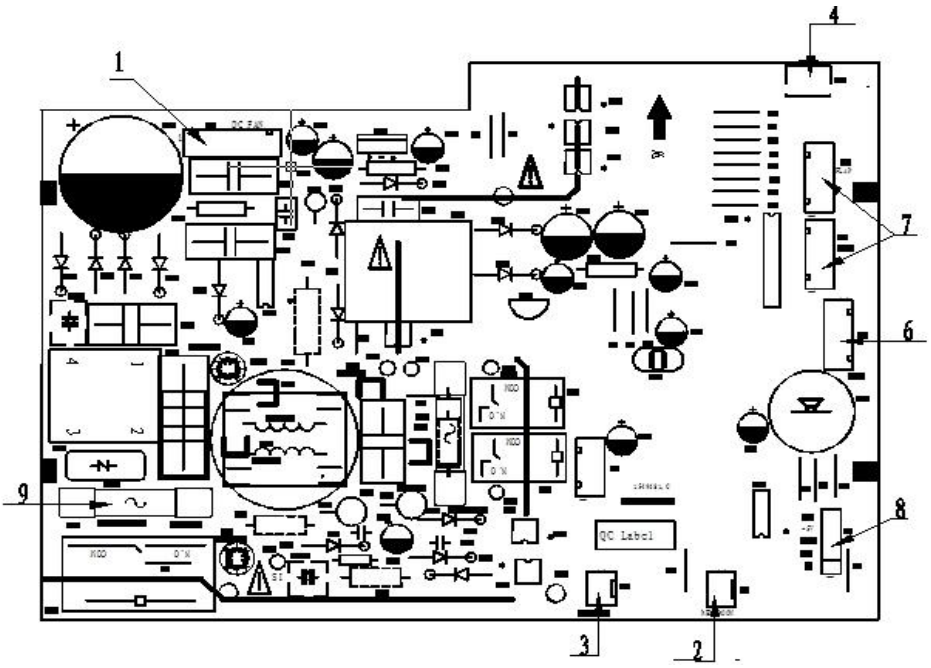

AS-30UR3SDKVQ、AS-36UR3SDKVQ

1	Interface of PG motor
2	Room/and Pipe temperature sensor
4	Switch button
6	swing
9	Protective tube

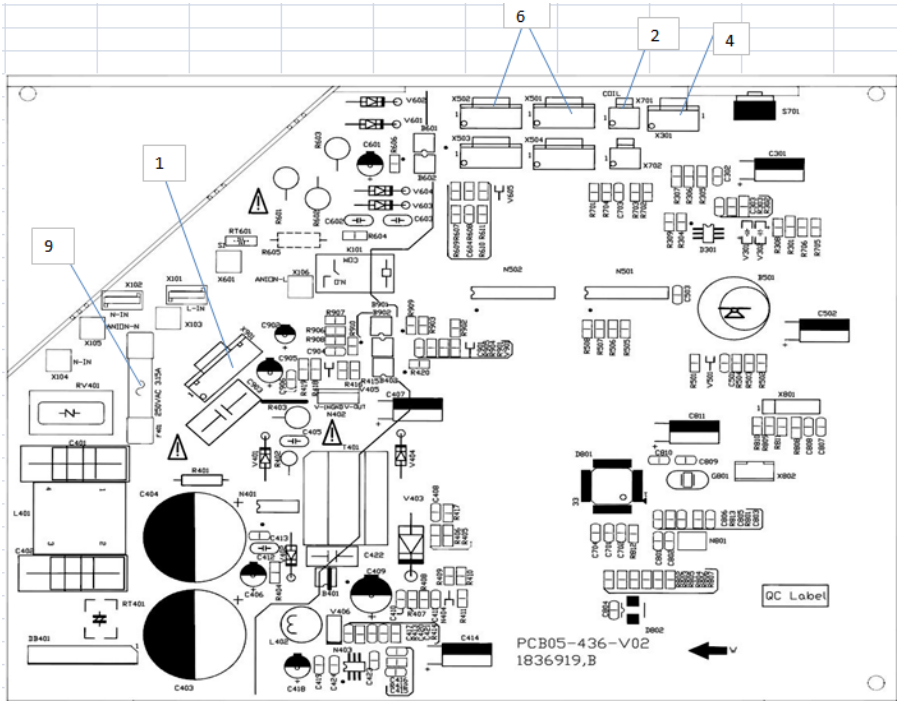

Model of outdoor

AS-09UW4SVDTG9、AS-12UW4SVETG9、AS-12TR5SVETG1、AS-12UR5SVETG1

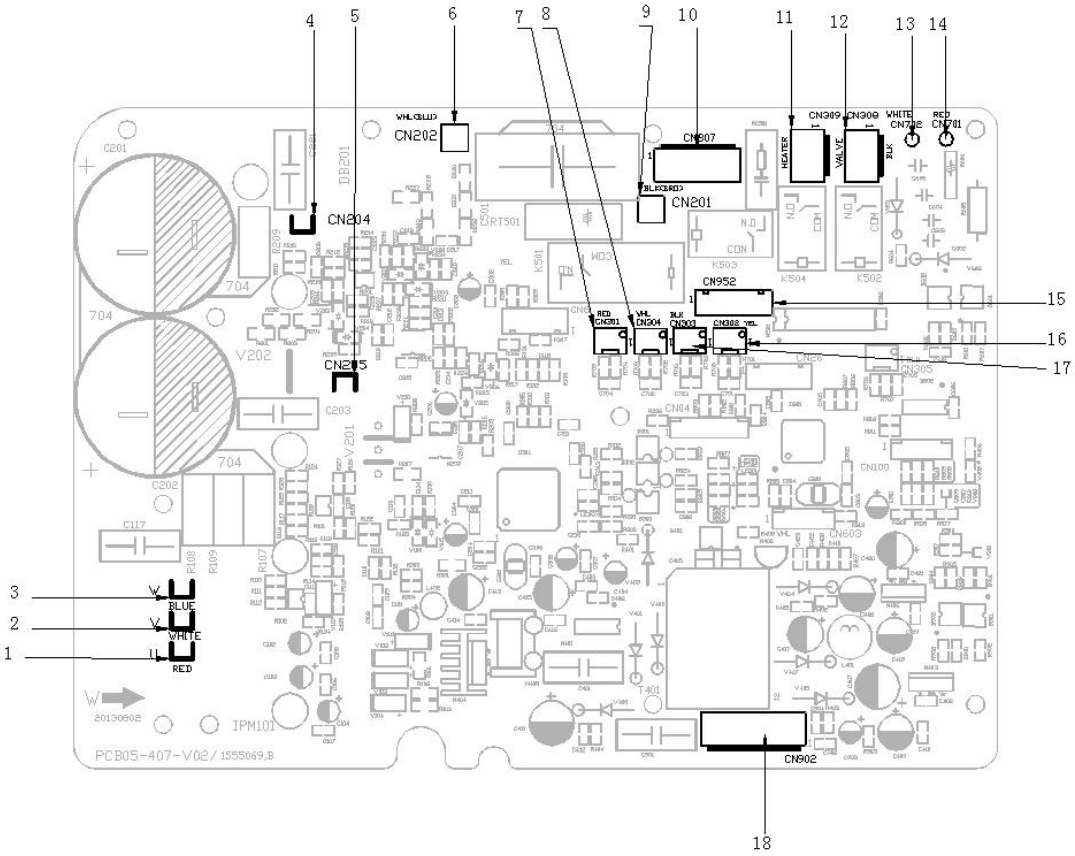

1	Terminal of compressor U phase	10	Terminal of AC fan
2	Terminal of compressor V phase	11	Terminal of heater
3	Terminal of compressor W phase	12	Terminal of 4-way valve
4	Terminal of reactor	13	Terminal of communication with wire filter board
5	Terminal of reactor	14	Terminal of communication with wire filter board
6	Terminal of neutral wire with filter board	15	Terminal of electronic expansion valve
7	Terminal of compressor overload protector	16	Outdoor ambient temperature sensor
8	Compressor discharge temperature sensor	17	Outdoor pipe temperature sensor
9	Terminal of live wire with filter board	18	Terminal of DC fan

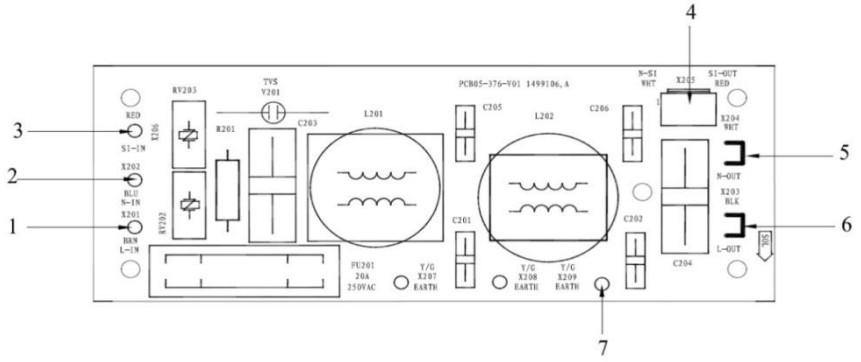

1	Live wire to terminal block	5	Terminal of nuetral wire to driver-board
2	Nuetral wire to terminal block	6	Terminal of live wire to driver-board
3	Communication wire to termial block	7	Terminal of ground wire
4	Terminal of communication to driver-board		

AS-12TR5SYDDB、AS-09TR3SVDTG、AS-09UR3SVDTG、AS-12TR3SVETG、AS-12UR3SVETG、AS-12UR3SVEDF、AS-09TR3SVETG、AS-09UR3SVETG

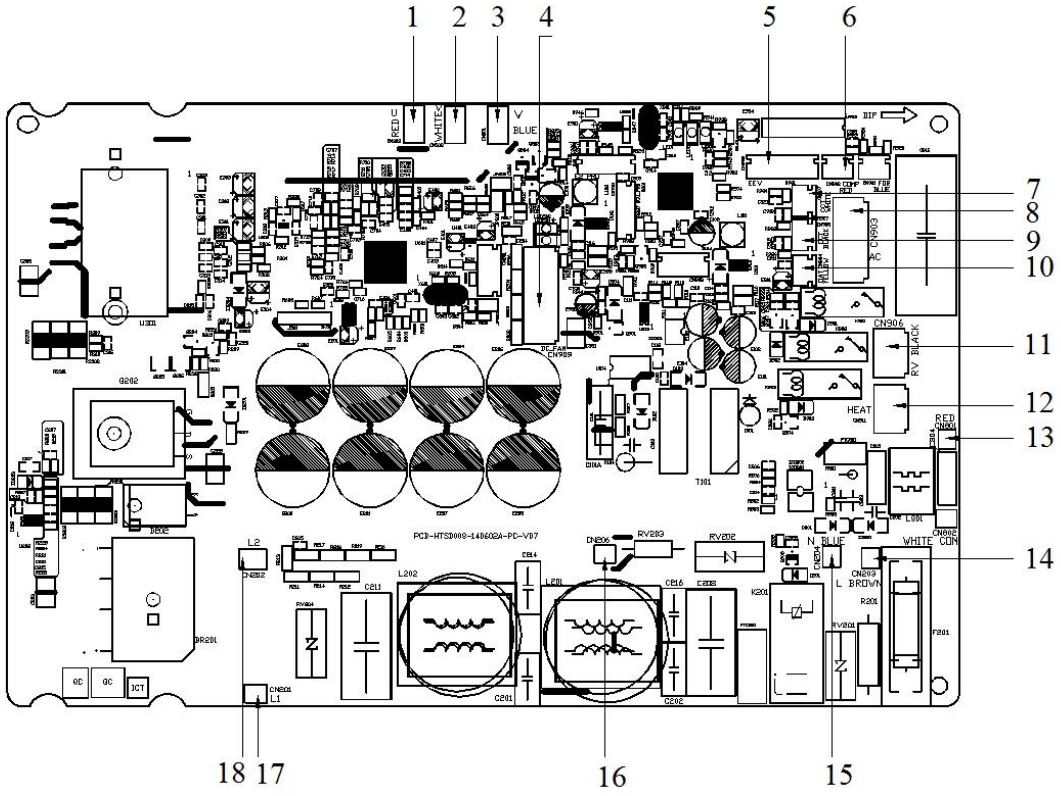

1	Terminal of compressor U phase	10	Outdoor ambient temperature sensor
2	Terminal of compressor V phase	11	Terminal of 4-way valve
3	Terminal of compressor W phase	12	Terminal of heater
4	Terminal of DC fan	13	Communication wire to terminal block
5	Terminal of electronic expansion valve	14	Terminal of neutral wire to terminal block
6	Terminal of compressor overload protector	15	Terminal of live wire to terminal block
7	Compressor discharge temperature sensor	16	Terminal of ground wire
8	Terminal of AC fan	17	Terminal of reactor
9	Outdoor pipe temperature sensor	18	Terminal of reactor

AS-12UR5SXXQA、AS-18TR3SBBTG、AS-18UR3SBBTG、AS-18TR3SXATG 、AS-18UR3SXATG、AS-18UR3SXADF、AS-18UW4SXATG、AS-22UW4SBBTG、AS-24TR3SBBTG、AS-24UR3SBBTG、AS-24UR3SBBDF、 AS-12TR3SXETG、AS-12UR3SXETG

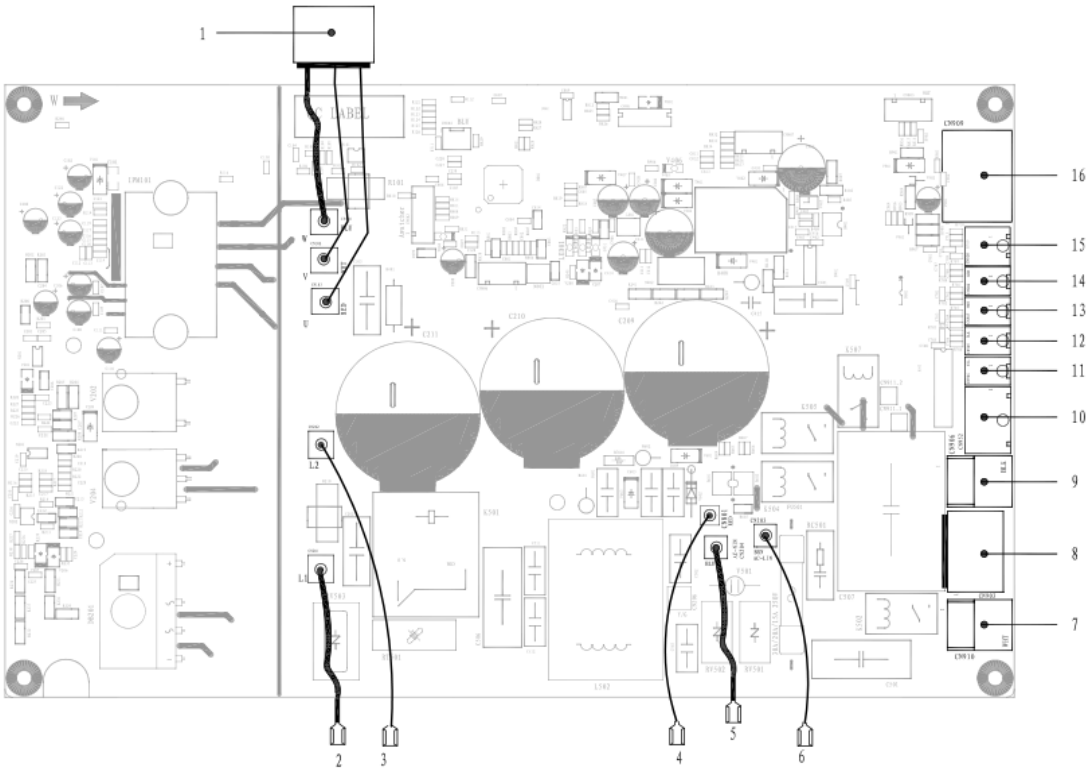

1	Terminal of compressor U/V/W phase	5	Terminal of neutral wire,connect to the terminal panel "1(N)"	9	4-way valve terminal	13	Compressor discharge temperature sensor
2	Terminal of reactor	6	Terminal of live wire,connect to the terminal panel "2(L)"	10	Terminal of electronic expansion valve	14	Terminal of compressor overload protector

3	Terminal of reactor	7	cool valve terminal	11	Outdoor ambient temperature sensor	15	Over pressure sensor
4	Terminal of signal wire,connect to the terminal panel "3(SI)"	8	Terminal of AC fan	12	Outdoor pipe temperature sensor	16	Terminal of DC fan

AS-18TR5SFATG、AS-18UR5SFATG、AS-22TR5SFBTG、AS-22UR5SFBTG

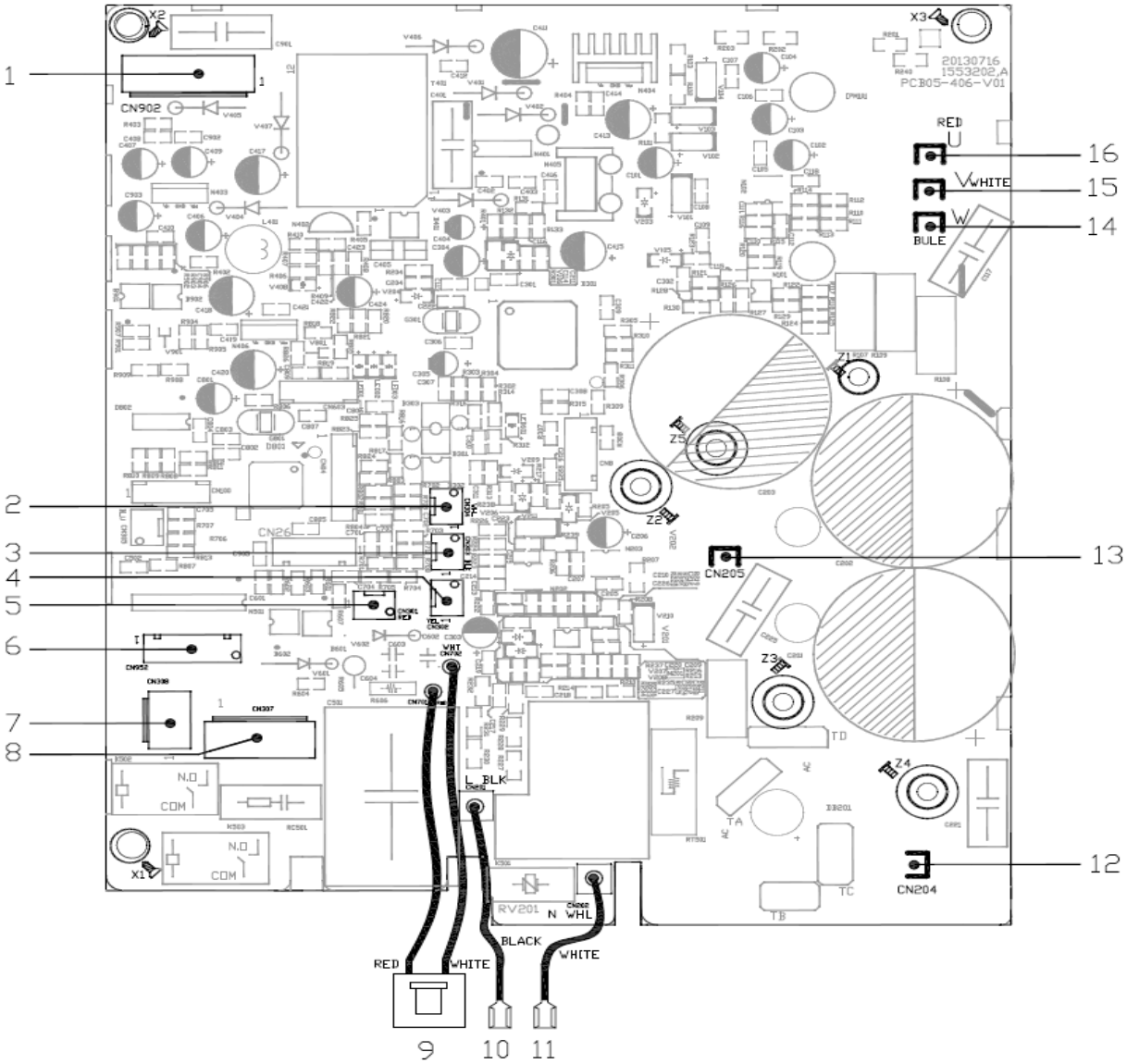

1	Terminal of DC fan	5	Terminal of compressor overload protector	9	Terminal of communication wire with filter board	14	Terminal of compressor W phase

2	Compressor discharge temperature sensor	6	Terminal of electronic expansion valve	10	Terminal of live wire with filter board	15	Terminal of compressor V phase
3	Outdoor pipe temperature sensor	7	4-way valve terminal	11	Terminal of neutral wire with filter board	16	Terminal of compressor U phase
4	Outdoor ambient temperature sensor	8	Terminal of AC fan	12,13	Terminal of reactor		

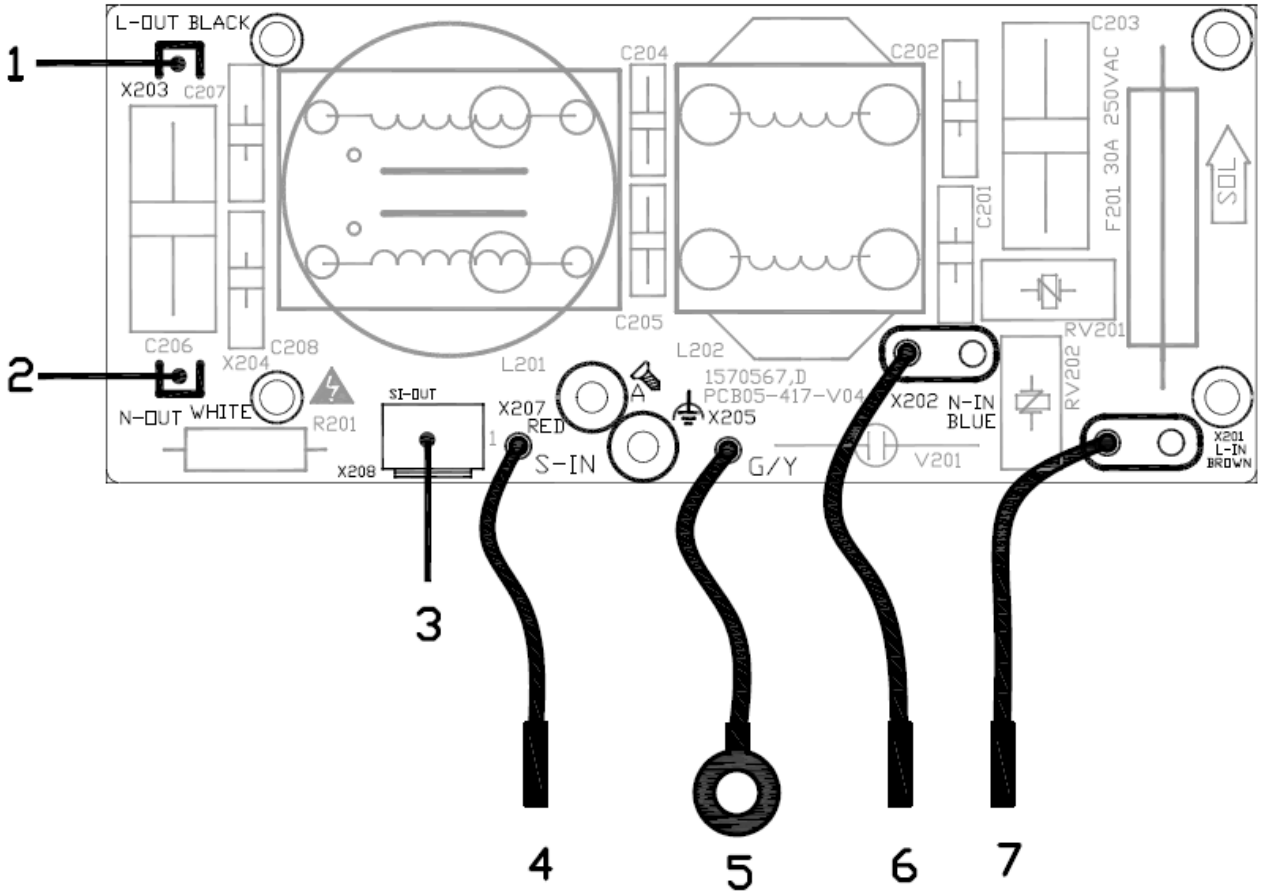

1	Terminal of live wire,connect to the driver board	4	Terminal of signal wire,connect to the terminal panel "3(SI)"	7	Terminal of live wire,connect to the terminal panel "2(L)"
2	Terminal of neutral wire,connect to the driver board	5	Terminal of ground wire		
3	Terminal of communication wire,connect to the driver board	6	Terminal of neutral wire,connect to the terminal panel "1(N)"		

AS-24TR3SDBTG、AS-24UR3SDBTG、AS-30UR3SDKVQ、AS-36UR3SDKVQ

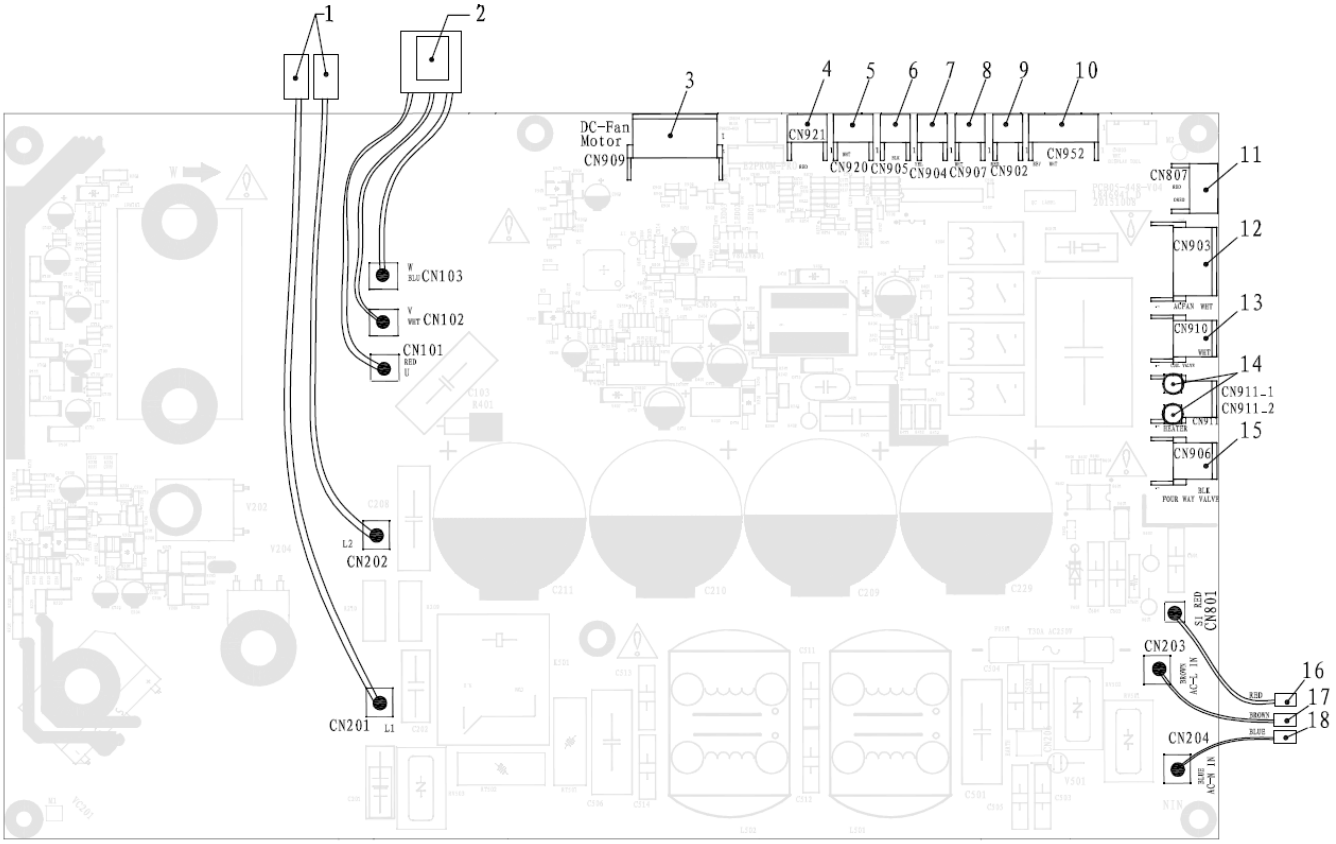

1	Terminal of reactor	6	Compressor discharge temperature sensor	11	DRED Function	16	Terminal of communication wire
2	Terminal of compressor	7	Outdoor ambient temperature sensor	12	Terminal of AC fan	17	Terminal of live wire
3	Terminal of DC fan	8	Outdoor pipe temperature sensor	13	Cool Valve terminal	18	Terminal of neutral
4	Heat Sink temperature sensor	9	Terminal of compressor overload protector	14	Heater terminal		
5	PressureProtector	10	Terminal of electronic expansion valve	15	4-way valve terminal		

6-2. Fan Motor

Drawings attached:

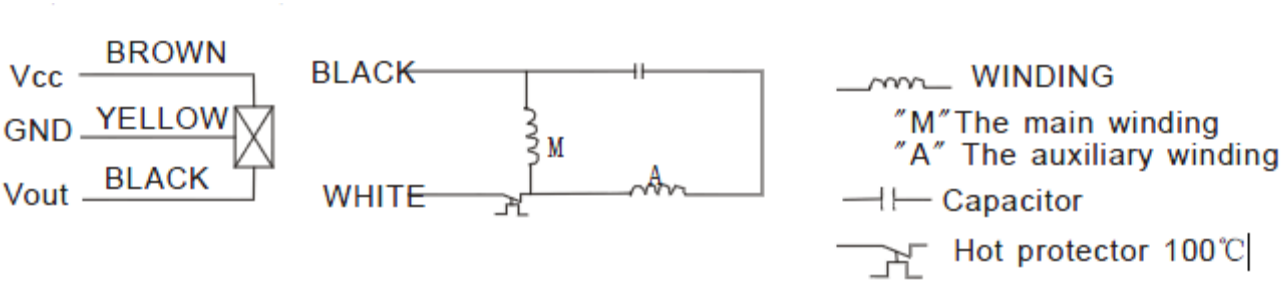

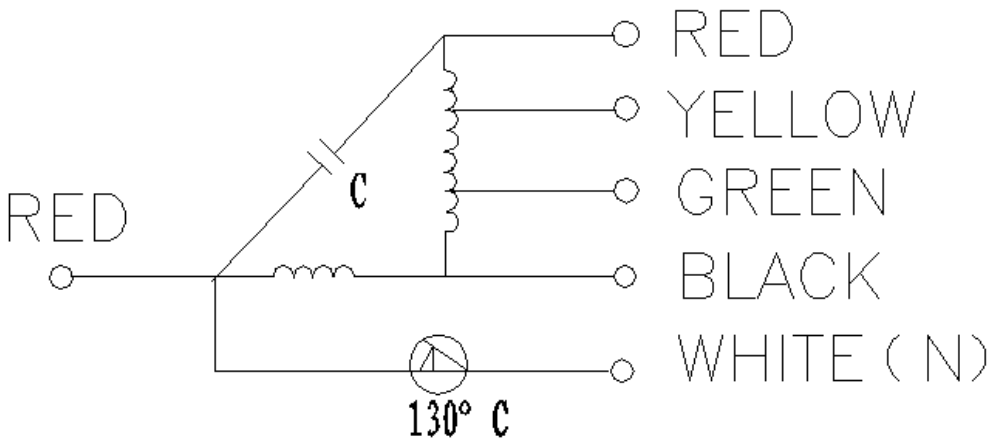

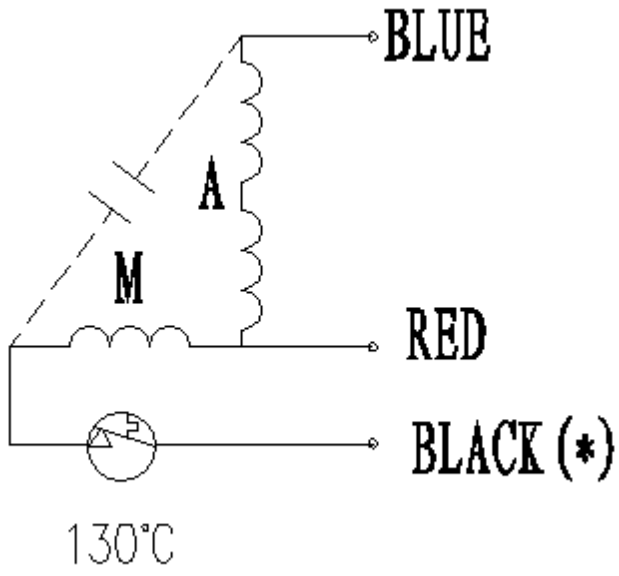

Test in resistance.

TOOL: Multimeter.

Test the resistance of the main winding. The indoor fan motor is fault if the resistance of

main winding 0(short circuit)or∞（open circuit）.

Test in voltage

TOOL: Multimeter.

Insert screwdriver into to rotate indoor fan motor slowly for 1 revolution or over, and measure voltage “YELLOW” and “GND” on motor. The voltage repeat 0V DC and 5V DC.

Notes:

1) Please don’t hold motor by lead wires.

2) Please don’t plug IN/OUT the motor connecter while power ON.

3)Please don’t drop hurl or dump motor against hard material. Malfunction may not be observed at early stage after such shock. But it may be found later, this type of mishandling void our warranty.

Indoor DC Fan Motor

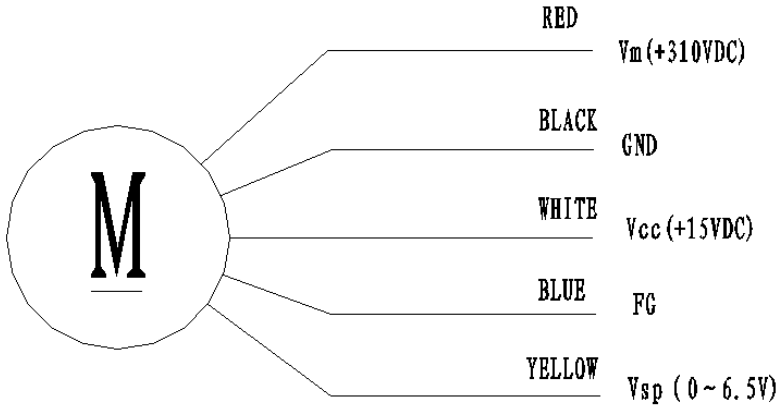

1	RED	Vm(+310VDC)
2	--	--------
3	--	--------
4	BLACK	GND
5	WHITE	Vcc(+15VDC)
6	BLUE	FG
7	YELLOW	Vsp (0~6.5V)

Outdoor DC Fan Motor

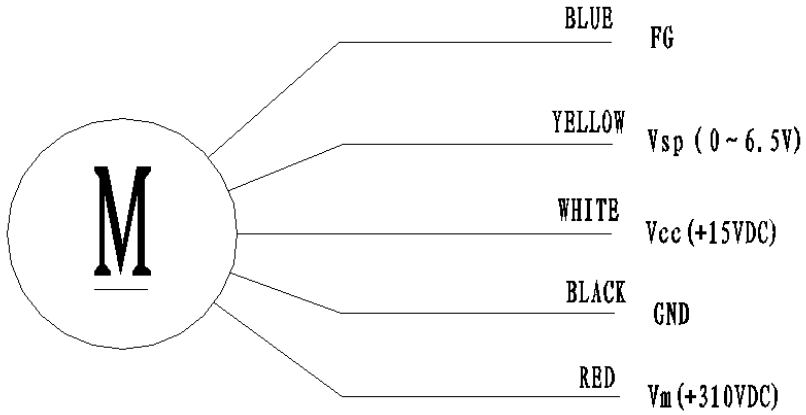

1	BLUE	FG
2	YELLOW	Vsp (0~6.5V)
3	WHITE	Vcc(+15VDC)
4	BLACK	GND
5	--	--------
6	RED	Vm(+310VDC)

6-3. Temperature Sensor

Parameter table attached:

1. THE PARAMETER OF THE INDOOR COIL AND INDOOR ROOM SENSOR ,THE PARAMETER OF THE OUTDOOR COIL AND OUTDOOR SENSOR:

（R(0)=15k B(0/100)=3450）

Temperature(℃)	Resistance(k)	Voltage(V)		Temperature(℃)	Resistance(k)	Voltage(V)
-20	38.757	0.58143512		31	4.292	2.715076661
-19	36.844	0.60795346		32	4.137	2.76063657
-18	35.038	0.63530819		33	3.989	2.805589174
-17	33.331	0.66352684		34	3.847	2.850117358
-16	31.719	0.69257720		35	3.711	2.894109636
-15	30.196	0.72246147		36	3.58	2.937788018
-14	28.755	0.75321223		37	3.455	2.980713033
-13	27.392	0.78480857		38	3.335	3.023117961
-12	26.103	0.81722911		39	3.219	3.065272268
-11	24.882	0.85051031		40	3.108	3.106725146
-10	23.727	0.88458737		41	3.001	3.147759536
-9	22.632	0.91951536		42	2.899	3.187898487
-8	21.594	0.95527085		43	2.801	3.227439565
-7	20.611	0.99179340		44	2.706	3.266717909
-6	19.678	1.02913875		45	2.615	3.305249514
-5	18.794	1.06721353		46	2.528	3.342947037
-4	17.954	1.10609872		47	2.444	3.380169671
-3	17.158	1.14565549		48	2.363	3.416856492
-2	16.401	1.18599135		49	2.286	3.45247766
-1	15.683	1.22696435		50	2.211	3.487894953
0	15	1.26865672		51	2.139	3.522585993
1	14.351	1.31098658		52	2.07	3.556485356
2	13.734	1.35393437		53	2.003	3.590032381
3	13.148	1.39741342		54	1.939	3.622673675
4	12.589	1.44157386		55	1.877	3.654865988
5	12.058	1.48618720		56	1.818	3.686036427
6	11.553	1.53125563		57	1.76	3.717201166
7	11.071	1.57689691		58	1.705	3.747244673
8	10.613	1.62286005		59	1.652	3.776658768
9	10.176	1.66928515		60	1.6	3.805970149
10	9.76	1.71601615		61	1.551	3.834009923
11	9.363	1.76311968		62	1.503	3.861880963
12	8.985	1.81043663		63	1.457	3.888973616
13	8.624	1.85805887		64	1.413	3.91524643
14	8.279	1.90597205		65	1.37	3.941267388
15	7.951	1.95387327		66	1.328	3.967019291
16	7.637	2.00204130		67	1.289	3.991234935

17	7.337	2.05033368		68	1.25	4.015748031
18	7.051	2.09859271		69	1.213	4.039284017
19	6.778	2.14682606		70	1.177	4.062450215
20	6.516	2.19524793		71	1.142	4.085229093
21	6.267	2.24333597		72	1.109	4.106941536
22	6.028	2.29151689		73	1.076	4.12888601
23	5.8	2.33944954		74	1.045	4.149715216
24	5.581	2.38741691		75	1.015	4.17007359
25	5.372	2.43506494		76	0.986	4.189944134
26	5.172	2.48247664		77	0.957	4.210004953
27	4.981	2.52951096		78	0.93	4.228855721
28	4.797	2.57653834		79	0.904	4.247168554
29	4.622	2.62291710		80	0.878	4.265640683
30	4.453	2.66931854				

Note: the AD value in the table is calculated on the basis of the pull-down resistor is 5.1K.

2. THE PARAMETER OF OUTDOOR COMPRESSOR TEMPERATURE SENSOR：

R(0)=187.25k B(0100)=3979)						
Temperature (℃)	Resistance(k)	Voltage(V)		Temperature (℃)	Resistance (k)	Voltage(V)
-20	542.867	0.06185563		51	19.907	1.273074475
-19	512.839	0.06543004		52	19.148	1.310312934
-18	484.672	0.06917993		53	18.422	1.348029498
-17	458.239	0.07311215		54	17.728	1.386170907
-16	433.423	0.07723358		55	17.065	1.424680494
-15	410.115	0.08155140		56	16.43	1.463624623
-14	388.213	0.08607312		57	15.822	1.502961719
-13	367.625	0.09080590		58	15.241	1.542579738
-12	348.264	0.09575738		59	14.684	1.582573078
-11	330.048	0.10093573		60	14.151	1.622834232
-10	312.904	0.10634837		61	13.64	1.663405088
-9	296.761	0.11200385		62	13.151	1.704175229
-8	281.556	0.11790981		63	12.682	1.745200698
-7	267.227	0.12407536		64	12.233	1.78637104
-6	253.72	0.13050821		65	11.802	1.827760456
-5	240.982	0.13721739		66	11.388	1.869364416
-4	228.965	0.14421140		67	10.992	1.910971223
-3	217.624	0.15149895		68	10.611	1.952788467
-2	206.917	0.15908889		69	10.246	1.994602839
-1	196.805	0.16699001		70	9.896	2.036415908
0	187.25	0.17521257		71	9.559	2.078366648
1	177.957	0.18402550		72	9.236	2.120229484
2	169.186	0.19319719		73	8.925	2.162162162
3	160.903	0.20273937		74	8.627	2.203928178
4	153.179	0.21252789		75	8.341	2.245558418

5	145.685	0.22297275		76	8.065	2.287251934
6	138.696	0.23368340		77	7.8	2.328767123
7	132.086	0.24480509		78	7.546	2.369998606
8	125.833	0.25634646		79	7.301	2.411176512
9	119.916	0.26831655		80	7.065	2.452217815
10	114.315	0.28072493		81	6.843	2.492120501
11	109.01	0.29358432		82	6.624	2.532777116
12	103.984	0.30690352		83	6.414	2.573028606
13	99.222	0.32068816		84	6.212	2.612972641
14	94.708	0.33494897		85	6.017	2.652726847
15	90.427	0.34969710		86	5.829	2.692216328
16	86.366	0.36494000		87	5.648	2.731362468
17	82.512	0.38068793		88	5.474	2.770083102
18	78.854	0.39694585		89	5.306	2.808524698
19	75.381	0.41372093		90	5.144	2.846617549
20	72.082	0.43102355		91	4.988	2.884289108
21	68.948	0.44885674		92	4.837	2.921715219
22	65.968	0.46723835		93	4.692	2.958579882
23	63.136	0.48615877		94	4.552	2.995066949
24	60.443	0.50562884		95	4.417	3.031113488
25	57.88	0.52566481		96	4.286	3.066931265
26	55.367	0.54691396		97	4.161	3.10190676
27	52.978	0.56877112		98	4.039	3.13682074
28	50.707	0.59123237		99	3.922	3.171050177
29	48.547	0.61430611		100	3.776	3.214826021
30	46.492	0.63799445		101	3.703	3.237170332
31	44.537	0.66229036		102	3.602	3.268602192
32	42.676	0.68720188		103	3.501	3.300650422
33	40.904	0.71272849		104	3.409	3.33039475
34	39.217	0.73885738		105	3.317	3.360680043
35	37.609	0.76561057		106	3.228	3.390506582
36	36.077	0.79296593		107	3.141	3.420179056
37	34.616	0.82093877		108	3.058	3.448975451
38	33.224	0.84949031		109	2.977	3.477549351
39	31.895	0.87866649		110	2.899	3.505516033
40	30.628	0.90841082		111	2.823	3.533201704
41	29.419	0.93873381		112	2.749	3.56058226
42	28.264	0.96965549		113	2.678	3.587254695
43	27.162	1.00111890		114	2.609	3.613561484
44	26.109	1.03315203		115	2.542	3.639477628
45	25.103	1.06573050		116	2.477	3.664977902
46	24.142	1.09883007		117	2.414	3.6900369
47	23.223	1.13246511		118	2.353	3.714629083
48	22.345	1.16658089		119	2.294	3.738728832
49	21.505	1.20120120		120	2.237	3.762310501
50	20.701	1.23631868				

Note: the AD value in the table is calculated on the basis of the pull-down resistor is 6.8K.

6-4. Compressor

Drawings attached:

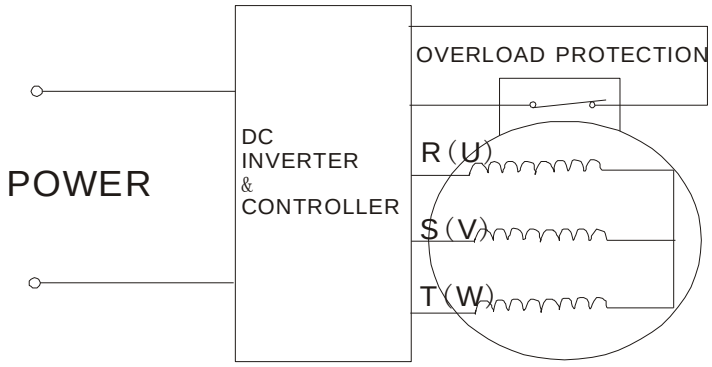

Test in resistance.

TOOL: Multimeter.

Test the resistance of the winding. The compressor is fault if the resistance of winding 0(short circuit)or∞（open circuit）

Familiar trouble: 1)Compressor motor lock. 2）Discharge pressure value approaches static pressure value .3)Compressor motor winding abnormality.

Notes：1）Don’t put a compressor on its side or turn over.

2) Please assembly the compressor in your air conditioner rapidly after removing the plugs.Don’t place the comp. In air for along time.

3) Avoiding compressor running in reverse caused by connecting electrical wire incorrectly.

4) Warning! In case AC voltage is impressed to compressor, the compressor performance will belower because of its rotor magnetic force decreasing.

6-5. Electric Reactor

Drawings attached:

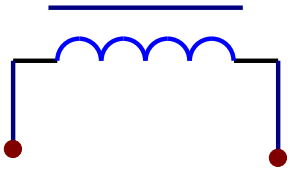

Familiar error:

1）Sound abnormality

2）Insulation resistance disqualification.

7.Trouble Shooting

7-1. Error Code Table

1.Indication on the outdoor unit:

When the unit has the following trouble and the compressor stops running, The LED of outdoor control board will show the error sequence automatically:

NOTE: ★：*LIGHT*　*O：FLASH*　´：*OFF*

Error code	Outdoor Failure Description	LED1	LED2	LED3	the root cause my be one of the following
Mark description: the lights flash every second for the following faults					
	Normal				
	Outdoor coil temperature sensor in trouble	★		★	**a.**the outdoor coil sensor connect loose; **b.**the outdoor coil temperature sensor is failure; **c.**the outdoor control board is failure
	Compressor exhaust temperature sensor in trouble	★			**a.**the compressor exhaust temperature sensor connect loose; **b.**the compressor exhaust temperature sensor is failure; **c.**the outdoor control board is failure
	Communication failure between the indoor unit and outdoor unit				**a.**the communication cable connect loose; **b.**the communication cable is failure; **c.**the connection between the filter board and the outdoor control board is incorrect or loose; **d.**the connection between the filter board and the terminal is incorrect or loose; **e.**the indoor control board is failure; **f.**the PFC board is failure; **g.**the power board is failure; **h.**the outdoor control board is failure.
	Current overload protection	★			**a.**the fan motor run abnormally; **b.**the condensor and evaporator is dirty; **c.**the air inlet and outlet is abnormally
	Maximum current protection	★		★	**a.**the outdoor control board is short circuit; **b.**the drive board is short circuit; **c.**the other components is short circuit
	Communication trouble between outdoor unit and		★	★	**a.** the connection wires connect loose **b.**the outdoor board or drive board is failure;

	driver				
	Outdoor EEPROM in trouble	★	★	★	**a.**the EEPROM chip is loose; **b.**the EEPROM chip inserted with opposite direction; **c.**the EEPROM chip is failure
	Compressor exhaust temperature too high protection			★	**a.**the compressor exhaust temperature sensor is failure; **b.**the refrigerant of the unit is not enough
	Outdoor ambient temperature sensor in trouble	★	★		**a.**the outdoor ambient temperature sensor connect loose; **b.**the outdoor ambient temperature sensor is failure; **c.**the outdoor control board is failure
	Compressor shell temperature too high protection		★		**a.**the compressor exhaust temperature sensor connect loose **b.**the refrigerant of the unit is not enough
	Anti-freeze protection with cooling or overload protection with heating in indoor unit				**a.**the indoor coil temperature sensor connect loose; **b.**the indoor coil temperature sensor is failure; **c.**the indoor control board is failure **d.** the refrigerant system is abnormal.
	Compressor drive in trouble				**a.**the outdoor drive board is failure; **b.**the compressor is failure **c.** the outdoor control board is failure
	Outdoor fan motor locked rotor protection			★	**a.**the connection of the outdoor fan motor is loose; **b.**there are something block the outdoor fan; **c.**the fan motor is failure; **d.**the outdoor control board is failure
	Outdoor coil anti-overload protection with cooling		★		**a.**the refrigerant is too much; **b.**the outdoor fan motor is failure; **c.**the outdoor fan is broken; **d.**the condensor is dirty; **e.**the air inlet and air outlet of the indoor unit and the outdoor unit is not normally

	IPM module protection				**a.**The IPM board is failure; **b.**The outdoor fan is broken; **c.**The outdoor fan motor is failure; **d.**The outdoor fan has been blocked ; **e.**The condenser is dirty; **f.**The outdoor unit has been installed without standard.
	PFC protection				**a.**the PFC is failure; **b.**the outdoor drive board is failure
	Compressor pre heating process		★		it is normal mode in cold weather
	Chip in outdoor board in trouble	★			a. Using the wrong drive board; b. Using the wrong compressor.
	AC voltage higher or lower protection	★	★		**a.**the supply voltage is higher or lower than normal; **b.**the inner supply voltage of the unit is higher or lower than normal
	DC compressor start failure				**a.**the outdoor drive board is failure; **b.**the compressor is failure
	Outdoor ambient temperature too low protection	★			**a**、Outdoor ambient temperature too low
Mark description: the lights flash every two seconds for the following faults					
	Protection against overheated outdoor radiator	O	×	×	**a. Radiator sensors fail** **b. Detection circuit of the sensor on the control panel fails**
	Protection of the system against too high pressure	O	O	×	a. The pressure switch fails b. The pressure detection switch on the control panel fails c. The measured value of the system pressure exceeds the limit

When the compressor is in operation:

Mark description: ★：Light O：Flash ×：Off; the flash cycle is 1S				
No.	**LED1**	**LED2**	**LED3**	**Reasons for the current operating frequency of the compressor is limited**
1	O	O	O	Normal frequency rising and decreasing, no limitation
2	×	×	★	Frequency decreasing or prohibition of frequency rising caused by over-current
3	×	★	★	Frequency decreasing or prohibition of frequency rising caused by anti-freezing of refrigeration or anti-overload in heating
4	★	×	★	Frequency decreasing or prohibition of frequency rising caused by too high compressor discharge temperature

5				Limit to the max operating frequency caused by too low power voltage
6	★	★	★	Operation at fixed frequency (in the case of capability measuring or compulsory operation at fixed frequency)
7	O	×	×	Protective frequency decreasing against outdoor overload (overpower, over frequency conversion rate, over torque, detection of DC under-voltage)
8	★	×	×	Frequency decreasing caused by indoor and outdoor communication fault
9	×	★	O	Frequency decreasing or prohibition of frequency rising protection against overload of outdoor coiled pipe
10	×	★	×	Frequency decreasing or prohibition of frequency rising for power-saving when it is being used simultaneously with other appliances

2.Indication by the indoor unit:

2.1. The 7-segment tube of the indoor display board will show the error code automatically when the unit has the following trouble:

Error code	Power	Timer	Running	Sleep	Remark：★Light o Flash x OFF		
	1	2	3	4	Content	Remark	**The root cause is may be one of the following**
EA					the error code will display when the communication between display board and control board have in trouble		a. The connection between the display board and control board is loose; b. The indoor control board is failure. c.The wiring of the display board is failure.

2.2.When the unit has the following trouble and the compressor stops running, press the sleep button on the remote controller for 4 times in ten seconds and the 7-segment tube of the display board will show the error code as the following, if two malfunction happened at the same time, it need press the sleep button for 4 times again, the LED will show the other error code.

Refer to the remote controller which the sleep key can set into 4 different combination ways (Hisense's new design remote controller), when using to check the error codes only takes effect for pressing the sleep key 10 times in ten seconds instead of 4 times.

NOTE: If the troubleshooting inquiry display by 7-segment tube, then the error code will be displayed, otherwise only the LED of the display board can show.

Error code	Running	Timer	Sleep	Power	Remark：★Light o Flash x OFF		
	1	2	3	4	**Content**	**Remark**	**The root cause is may be one of the following**

0					Normal		
1	x	o	x	x	The failure for temperature sensor of outdoor coil		a. The outdoor temperature sensor loose; b. The outdoor temperature sensor is failure; c. The indoor control board is failure
2	×	O	★	×	Compressor exhaust temperature sensor in trouble		**a.**the compressor exhaust temperature sensor connect loose; **b.**the compressor exhaust temperature sensor is failure; **c.**the outdoor control board is failure
5	★	O	×	×	IPM module protection		**a.**The IPM board is failure; **b.**The outdoor fan is broken; **c.**The outdoor fan motor is failure; **d.**The outdoor fan has been blocked ; **e.**The condenser is dirty; **f.**The outdoor unit has been installed without standard.
6	★	O	×	★	AC voltage higher or lower protection		**a.**the supply voltage is higher or lower than normal; **b.**the inner supply voltage of the unit is higher or lower than normal
7	★	O	★	×	Communication failure between the indoor unit and outdoor unit		**a.**the communication cable connect loose; **b.**the communication cable is failure; **c.**the connection between the filter board and the outdoor control board is incorrect or loose; **d.**the connection between the filter board and the terminal is incorrect or loose; **e.**the indoor control board is failure; **f.**the PFC board is failure; **g.**the power board is failure; **h.**the outdoor control board is failure.
8	★	O	★	★	Current overload protection		**a.**the fan motor run abnormally; **b.**the condensor and evaporator is dirty; **c.**the air inlet and outlet is

							abnormally
9	×	×	O	×	Maximum current protection		**a.**the outdoor control board is short circuit; **b.**the drive board is short circuit; **c.**the other components is short circuit
10	×	×	O	★	Communication trouble between outdoor unit and driver		**a.** the connection wires connect loose **b.**the outdoor board or drive board is failure;
11	×	★	O	×	Outdoor EEPROM in trouble		**a.**the EEPROM chip is loose; **b.**the EEPROM chip inserted with opposite direction; **c.**the EEPROM chip is failure
12	×	★	O	★	Outdoor ambient temperature too low protection		Outdoor ambient temperature too low
13	★	×	O	×	Compressor exhaust temperature too high protection		**a.**the compressor exhaust temperature sensor is failure; **b.**the refrigerant of the unit is not enough
14	★	×	O	★	Outdoor ambient temperature sensor in trouble		**a.**the outdoor ambient temperature sensor connect loose; **b.**the outdoor ambient temperature sensor is failure; **c.**the outdoor control board is failure
15	★	★	O	×	Compressor shell temperature too high protection		**a.**the compressor exhaust temperature sensor connect loose **b.**the refrigerant of the unit is not enough
16					Anti-freeze protection with cooling or overload protection with heating in		**a.**the indoor coil temperature sensor connect loose; **b.**the indoor coil temperature sensor is failure; **c.**the indoor control board is failure **d.** the refrigerant system is abnormal.

17					PFC protection		**a.**the PFC is failure; **b.**the outdoor drive board is failure
18					DC compressor start failure		**a.**the outdoor drive board is failure; **b.**the compressor is failure
19	×	×	×	O	Compressor drive in trouble		**a.**the outdoor drive board is failure; **b.**the compressor is failure **c.** the outdoor control board is failure
20	★	×	×	O	Outdoor fan motor locked rotor protection		**a.**the connection of the outdoor fan motor is loose; **b.**there are something block the outdoor fan; **c.**the fan motor is failure; **d.**the outdoor control board is failure
21					Outdoor coil anti-overload protection with cooling		**a.**the refrigerant is too much; **b.**the outdoor fan motor is failure; **c.**the outdoor fan is broken; **d.**the condensor is dirty; **e.**the air inlet and air outlet of the indoor unit and the outdoor unit is not normally
22					Compressor pre heating process		it is normal mode in cold weather
24					Chip in outdoor board in trouble		a. Using the wrong drive board; b.Using the wrong compressor.
26					Overheated outdoor radiator		**a.** Radiator sensor fails **b.** Detection circuit of the sensor on the control panel fails
27					Protection against too high system pressure		a. The pressure switch fails b. The pressure detection switch on the control panel fails c. The measured value of system pressure exceeds the limit
33	o	x	x	★	The failure for temperature sensor of indoor room		a. The indoor room temperature sensor loose; b. The indoor room temperature sensor is failure; c. The indoor control board is failure.

34	o	x	★	x	The failure for temperature sensor of indoor coil temperature		a. The indoor coil temperature sensor loose; b. The indoor coil temperature sensor is failure; c. The indoor control board is failure.
36	O	★	×	★	Communication failure between the indoor unit and outdoor unit		**a.**the communication cable connect loose; **b.**the communication cable is failure; **c.**the connection between the filter board and the outdoor control board is incorrect or loose; **d.**the connection between the filter board and the terminal is incorrect or loose; **e.**the indoor control board is failure; **f.**the PFC board is failure; **g.**the power board is failure; **h.**the outdoor control board is failure.
38	o	★	★	★	Indoor EEPROM failure		a. The EEPROM chip loose; b. The indoor control board is failure
39	o	x	★	★	Indoor fan motor run abnormally		a. There are something block the indoor fan motor; b. The fan motor cord connect loose; c. The fan motor is failure; d. The indoor control board is failure
41	★	★	o	★	The failure for Indoor grounding protective		The indoor control board is failure

The failure is detected when the room temperature sensor broken or shorted over 5 sec.
The failure is detected when the temperature sensor of heater exchange broken or shorted over 5 sec.
The failure is detected when each setting data is not match after the EEPPOM self-check two times.
The failure is occur when the grounding signal is not detected after the appliance power ON.

7-2. Test the jumper terminals

Note:

When the whole machine is powered up, if the external unit does not work, to rule out the communications failures, adopt screening method such as short circuit on the jumper terminals to see if the external unit can be started normally or similar method.

There are two blue terminals on the outdoor control panel, as shown above.
Application: Short out the terminals, and power up the outdoor unit, then the outdoor unit may run independently. It can be determined that there is no internal and external communication faults.

7-3. Trouble Diagnosis of Protection

Protection diagnosis of the complete machine (all types of protection during operation, i.e. under-voltage, over-voltage and overcurrent protection)

Note: List all types of protection that may occur to the complete machine and describe the conditions and signs of the start, course and end of such protection.

Voltage protection

Protection against AC input over-voltage/under-voltage

1.Conditions for protection against AC input over-voltage/under-voltage:

If the input AC voltage is greater than “protective over-voltage value” or less than “protective under-voltage value” for five seconds, over-voltage/under-voltage protection tarts.

2.Protection actions against AC input over-voltage/under-voltage

The system stops operation.

3. Conditions for ending AC input over-voltage/under-voltage:

If the input AC voltage is lower than “the protective over-voltage value” -10V, or higher than “the protective under-voltage value” +10V, the over-voltage/under-voltage protection will be released.

Current protection:

1.Protection against over-current

Conditions for over-current protection: if the current is equal to or greater than “current value for starting the refrigeration current protection (E2 value)” for six seconds, over-current protection starts.

Protection actions against over-current: indoor display screen and outdoor indicator give indications, the compressor and outdoor fan stop, but indoor fan runs normally.

Condition for ending over-current protection: when the current drops below “current value for releasing the refrigeration current protection (E2 value)”, over-current protection will be released.

2.Frequency decreasing for over-current

Conditions for over-current **frequency decreasing**: if the current is equal to or greater than “current value

for starting the refrigeration current protective frequency decreasing (E2 value)", over-current **frequency decreasing** starts.

Over-current **frequency decreasing** actions: the compressor will decrease frequency at rate of (E2 value)Hz/S. The indoor and outdoor fans run.

Conditions for ending over-current **frequency decreasing**: when the current drops below "current value for starting the refrigeration current protective prohibition of frequency rising (E2 value)", over-current under-clocking will be released.

3.Prohibition of frequency increasing of compressor exhausting

Conditions for prohibition of frequency rising of compressor discharge

Condition 1: in the case of frequency decreasing of compressor discharge, the discharge temperature of the compressor drops below X4℃.

Condition 2: in normal operation, the discharge temperature of compressor reaches X5℃.

Either of the above two conditions is met, prohibition of frequency rising of compressor discharge begins.

Actions relates to prohibition of frequency rising of compressor discharge: the frequency of compressor maintains at the current level, which may decrease as the case requires while cannot rise. The indoor and outdoor fans run.

Condition for ending prohibition of frequency rising of compressor discharge: if the temperature of compressor discharge drops below X6℃, prohibition of frequency rising of compressor discharge will be released.

4. Prohibition of frequency for anti-overload of outdoor coiled pipe

Condition for anti-overload prohibition of frequency of outdoor coiled pipe: in the case of anti-overload frequency decreasing of outdoor coiled pipe, anti-overload prohibition of frequency of the unit begins when the temperature of outdoor coiled pipe drops below "the anti-overload frequency decreasing temperature of outdoor coiled pipe".

Actions relates to anti-overload prohibition of frequency of outdoor coiled pipe: the frequency of compressor maintains at the current level, which may decrease as the case requires while cannot rise. The indoor and outdoor fans run.

Condition for ending anti-overload prohibition of frequency of outdoor coiled pipe: if the temperature of outdoor coiled pipe drops below "temperature to release the anti-overload state of outdoor coiled pipe", anti-overload prohibition of frequency of outdoor coiled pipe will be released.

7-4. Trouble Diagnosis of Compressor

Judging the connecting terminals of inverter compressor:

It is impossible to identify terminals U, V and W of inverter compressor with multi-meter. Just connect the terminals in the same way as the original unit when replacing the compressor. A wrong connection will lead to reverse and loud noise of the compressor.

Resistance of compressor coil:

Measure the resistance between any two terminals, which are about a few Ohms, three phases having the same resistance.

7-5. Trouble Diagnosis of Electric Filter Board

Visual examination: as the circuit is simple, the connection may be checked visually to see whether any loose or poor connection.

Voltage test: the voltage at the input end shall be the same as the voltage at the output end.

7-6. Trouble Diagnosis of Electric Communication

Step one: to determine whether the connecting cables and tether cables of indoor/outdoor units are correctly wired. If not, change wiring order and test connection.

Step two: to determine whether there is loose connection.

Fasten the connection in the case of loose connection and then conduct verification.

Step three: measure the voltage between SI and N with multi-meter and see whether the voltage fluctuates between 0V and 24V. Please directly replace indoor and outdoor control boards if there are not voltage fluctuations.

编制：　　审核：　　批准：